GROUP 8 ANTI-RESTART SYSTEM

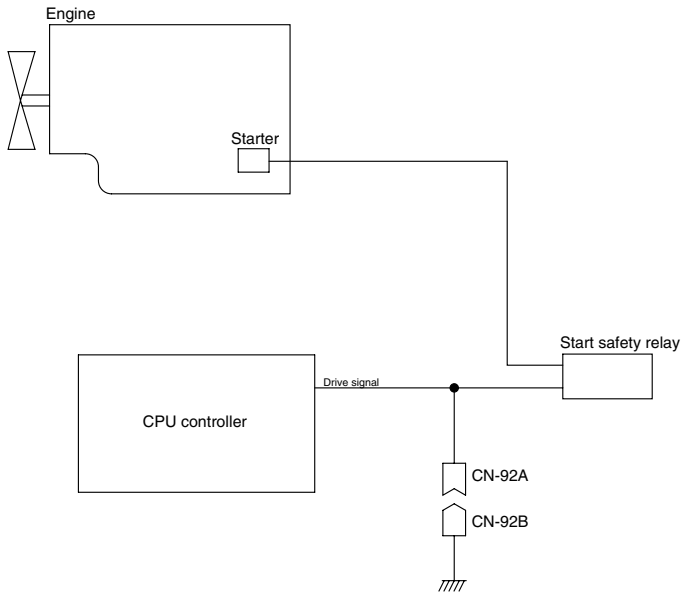

21075MS10

1. ANTI-RESTART FUNCTION

After 10 seconds from the engine starts to run, CPU controller turns off the start safety relay to protect the starter from inadvertent restarting.

2. When a replacement or taking-off of the CPU controller is needed, connect CN-92a and CN-92b to ensure the engine start without the CPU controller.