Table of contents

Introduction **1**
Information on this Operator's Manual ... 1-1
Machine overview ... 1-2
Brief description ... 1-3
Traveling drive ... 1-3
Operating hydraulics ... 1-3
Cooling system ... 1-3
Definition of the term "Protective Structure" ... 1-4
Explanation of abbreviations ... 1-4
Rollbar ... 1-4
Mechanical integrity ... 1-4
Responsibility for vehicle equipped with protective structures ... 1-4
Fields of application, attachments ... 1-5
Regulations ... 1-6
EC Declaration of Conformity ... 1-7
Type labels and component numbers ... 1-8
Overview of adhesive labels ... 1-10
Overview of safety labels ... 1-15

Safety instructions **2**
Identification of warnings and dangers ... 2-1
Warranty ... 2-2
Disposal ... 2-2
Designated use and exemption from liability ... 2-3
General conduct and safety instructions ... 2-4
Organizational measures ... 2-4
Selection and qualification of personnel, basic responsibilities ... 2-5
Safety instructions regarding operation ... 2-6
Normal operation ... 2-6
Operation with lowered ROPS rollbar ... 2-9
Checks when reversing the machine ... 2-9
Lifting gear applications ... 2-10
Working with attachments ... 2-10
Transportation ... 2-10
Working in the area of underground electric lines ... 2-11
Working near overhead electric lines ... 2-11
Safety instructions for maintenance ... 2-12
Warning of special hazards ... 2-14
Electrical energy ... 2-14
Gas, dust, steam, smoke ... 2-14
Hydraulic system ... 2-14
Noise ... 2-14
Oil, grease and other chemical substances ... 2-15
Battery ... 2-15
Safety instructions regarding internal combustion engines ... 2-16
Tracks ... 2-16
Hammer operation ... 2-16
Safety instructions ... 2-17
Working with a hammer ... 2-17
Dual Power (option) ... 2-19

Operation **3**
Control stand overview ... 3-2
Display elements (overview) ... 3-3
Putting into operation ... 3-4
Safety instructions ... 3-4
Putting into operation for the first time ... 3-4
Running-in period ... 3-4
Check lists ... 3-5
Start-up checklist ... 3-5
Operation checklist ... 3-6
“Parking” checklist ... 3-6
Driving the excavator ... 3-7
Starter ... 3-7
Throttle ... 3-7
Travel signal (option) ... 3-8
Indicator lights and warning lights (overview) ... 3-8
Starting the engine: general ... 3-11
Procedure ... 3-11
Starting at low temperatures ... 3-12
When the engine has started ... 3-12
Engine and machine warm-up ... 3-12
Jump-starting the engine (supply battery) ... 3-13
Special instructions for machine travel on public roads ... 3-14
Machine travel position ... 3-14
Starting vehicle travel ... 3-14
Operating temperature range ... 3-14
Drive levers ... 3-14
ISO/SAE changeover (option) ... 3-15
Hydraulic brake ... 3-15
Stabilizer blade as a parking brake ... 3-16
Machine travel on slopes ... 3-17
Stabilizer blade operation ... 3-20
Changing the width of the stabilizer blade ... 3-20
Telescopic travel gear ... 3-22
Upper carriage lock ... 3-23
Parking the machine ... 3-24
Parking the machine on slopes ... 3-24
Light system ... 3-25
Power outlet ... 3-25
Seat adjustment ... 3-26
Access to the control stand ... 3-26
Telescopically extended travel gear ... 3-27
Lowerable ROPS rollbar ... 3-28
Lowering the rollbar ... 3-28
Raising the rollbar ... 3-29
Retracting seat belt ... 3-31
Engine cover ... 3-33
Battery master switch ... 3-35

Towing the machine ... 3-36
Crane-lifting the machine ... 3-37
Loading and transporting the machine ... 3-39
Tying down the machine ... 3-40
Shatter protection (option) ... 3-41
Machine operation ... 3-43
General safety instructions ... 3-43
Control lever overview ... 3-45
Control lever on the left ... 3-45
Control lever on the right ... 3-45
Boom swivel controls ... 3-47
Boom swivel controls ... 3-47
Auxiliary hydraulics ... 3-49
Auxiliary hydraulics ... 3-49
Auxiliary hydraulics (double-action option) ... 3-50
Emergency lowering ... 3-52
Rotating the upper carriage ... 3-53
Upper carriage deceleration ... 3-53
Lock lever ... 3-54
Lock lever ... 3-54
Dual Power (option) ... 3-55
Overview of connections ... 3-56
Coupling ... 3-57
Checking the hydraulic oil levels of the power unit and excavator ... 3-59
Changeover from HPU to diesel operation ... 3-60
Changeover from diesel to HPU operation ... 3-61
Uncoupling ... 3-62
Charging the excavator battery ... 3-63
Charging the battery with the power unit ... 3-65
Charging the battery with the mains ... 3-65
Dual-Power operation with rotating beacon ... 3-66
Relieve pressure from auxiliary hydraulics ... 3-67
Re-equipping attachments ... 3-68
Specific safety instructions ... 3-68
Removing a bucket ... 3-69
Installing a bucket ... 3-69
Lehnhoff mechanical quickhitch system (optional) ... 3-70
Maintenance schedule of Lehnhoff mechanical quickhitch system ... 3-74
Connections for auxiliary hydraulics ... 3-75
Connections for auxiliary hydraulics (stick hose routing option) ... 3-76
Attachments ... 3-77
Maintenance of attachments ... 3-77
Working with the standard bucket ... 3-77
Inadmissible work procedures ... 3-77
Excavator work position ... 3-78
Bucket position when digging ... 3-79
Excavating trenches ... 3-79
Loading ... 3-80
Grading ... 3-80
Excavating trenches sideways ... 3-80
Grading ... 3-81
Grading ... 3-81
Working on slopes ... 3-82

Malfunctions **4**
Engine trouble ... 4-1

Maintenance **5**
Introduction ... 5-1
Fuel system ... 5-2
Specific safety instructions ... 5-2
Refueling ... 5-3
Drain fuel ... 5-3
Stationary fuel pumps ... 5-3
Bleeding the fuel system ... 5-4
Fuel prefilter with water separator ... 5-5
Engine lubrication system ... 5-6
Checking the oil level ... 5-7
Adding engine oil ... 5-7
Engine cooling system ... 5-8
Specific safety instructions ... 5-8
Checking the coolant level/adding coolant ... 5-10
Cleaning the radiator ... 5-11
Air filter ... 5-12
Air filter ... 5-13
Replacing air filter elements ... 5-13
V-belt ... 5-14
Checking V-belt tension ... 5-14
Re-tension the V-belt ... 5-14
Hydraulic system ... 5-15
Important information on the hydraulic system ... 5-15
Checking the hydraulic oil level ... 5-16
Adding hydraulic oil ... 5-16
Important information on the use of biodegradable oil ... 5-17
Checking hydraulic pressure lines ... 5-18
Overview of lubrication points ... 5-19
Parking the machine ... 5-20
Swiveling cylinder lubrication points ... 5-20
Lubricating the live ring (ball bearing) ... 5-21
Lubricating the teeth of the live ring ... 5-22
Ball sockets (ISO/SAE changeover option) ... 5-23
Tracks ... 5-24
Checking track tension ... 5-24
Tightening the tracks ... 5-25
Traveling drive ... 5-26
Electrical system ... 5-27
Specific safety instructions ... 5-27
Servicing and maintenance at regular intervals ... 5-27
Instructions concerning specific components ... 5-28
Alternator ... 5-28
Battery ... 5-29
General maintenance ... 5-30
Cleaning ... 5-30
General instructions for all areas of the vehicle ... 5-30
Control stand ... 5-31
On the outside of the vehicle ... 5-31
Engine compartment ... 5-31
Threaded fittings and attachments ... 5-32

Pivots and hinges 5-32
Preparatory work before taking out of service 5-32
Maintenance when out of service for a longer period of time 5-33
Putting into operation again 5-33
Fluids and lubricants 5-34
Oil change and filter replacement (hydraulics) 5-36
Maintenance plan (overview) 5-37
Maintenance label 5-42
Explanation of symbols on the maintenance label 5-42

Technical data **6**
Chassis 6-1
Engine 6-1
Travel gear and swivel unit 6-2
Stabilizer blade 6-3
Operating hydraulics 6-3
Connection values of Dual Power option 6-3
Electrical system 6-3
Fuses behind the right-hand trim 6-4
Relays behind the right-hand trim 6-4
Fuses and relays with Dual Power option 6-5
Noise measurement 6-6
Vibration 6-6
Coolant compound table 6-9
Weight 6-9
Dimensions with rollbar 6-10
Dimensions without rollbar 6-11
Lift capacity tables 6-12
Safety instructions – lift capacity table 6-12

A

Abbreviations 1-1
Air filter 5-12

B

Biodegradable oil 5-17

C

Changeover from diesel to HPU operation 3-61
Changeover from HPU to diesel operation 3-60
Check lists 3-5
Cleaning the radiator 5-11
Crane-lifting bracket 3-37

D

Designated use and exemption from liability 2-3
Display elements (overview) 3-3
Driving on public roads 3-14
Driving the excavator 3-7

E

Entry and exit 3-26

G

Gradient angle 3-18

H

Hammer operation 2-16

I

Indicator lights and warning lights 3-8
Instrument panel overview 3-3
ISO/SAE changeover 3-15

L

Lateral angle of inclination 3-19
Legal regulations 1-6
Lehnhoff mechanical quickhitch system (optional) 3-70
Lifting gear applications 2-10
Light system 3-25
Lock lever 3-54
Lubricating the live ring (ball bearing) 5-21
Lubricating the teeth of the live ring 5-22

M

Maintenance
- Adding coolant 5-10
- Adding engine oil 5-7
- Adding hydraulic oil 5-16
- Air filter 5-13
- Biodegradable oil 5-17
- Bleeding the fuel system 5-4
- Check the hydraulic oil level 5-16
- Checking the coolant level 5-10
- Checking the engine-oil level 5-7
- Cleaning 5-30
- Electrical system 5-27
- Engine and hydraulics cooling system 5-8
- Engine lubrication system 5-6
- fuel system 5-2
- General maintenance 5-30
- Hydraulic pressure lines 5-18
- Hydraulic system 5-14
- Instructions concerning specific components 5-28
- Maintenance plan 5-37
- Pivots and hinges 5-32
- Servicing and maintenance at regular intervals 5-27
- Threaded fittings 5-32
- Track maintenance 5-24
- V-belt 5-14

Maintenance schedule of Lehnhoff mechanical quickhitch system 3-74
Maintenance when out of service for a longer period of time 5-33

N

Noise levels 1-11
Notes
- On the Operator's Manual 1-1

O

Operation 3-1
- Before starting the engine 3-10
- Control stand overview 3-2
- Parking the machine 3-24
- Seat belt height adjustment 3-32
- Starting the engine 3-11
- Starting vehicle travel 3-14

P

Putting into operation 3-2
- Check lists 3-5
- Putting into operation for the first time 3-4
- Safety instructions 3-4

R

Refueling 5-3
Relieve pressure from auxiliary hydraulics 3-67
Running-in period 3-4

S

Safety instructions 2-1
General conduct 2-4
Identification 2-1
Lifting gear applications 2-10
Maintenance 2-12
Operating 2-6
Special hazards 2-14
Transportation 2-10
Retracting seat belt 3-31
Seat belt height adjustment 3-32
Shatter protection 3-41
Starting aid 3-13

T

Technical data 6-1
Chassis 6-1
Coolant compound table 6-9
Dimensions 6-10, 6-11
Electrical system 6-3
Engine 6-1
Noise levels 6-6
Vibration 6-6
Work hydraulics 6-3
Track maintenance 5-24

V

vehicle
Brief description 1-3
Fields of application 1-5
Loading and transporting 3-39
Overview 1-2

W

Warranty 2-2
Working
Freeing the machine 3-80
Recommendations 3-80
Working on slopes 3-82

1 Introduction

1.1 Information on this Operator's Manual

The Operator's Manual is stored in the storage bin at the rear of the seat.

This operator's manual contains important information on how to work safely, correctly and economically with the vehicle. Therefore, it aims not only at new personnel, but it also serves as a reference for experienced personnel. It helps to avoid hazardous situations and reduce repair costs and downtimes. Furthermore, the reliability and the service life of the machine will be increased by following the instructions in the Operator's Manual. This is why the Operator's Manual must always be kept at hand in the machine.

Your own safety, as well as the safety of others, depends to a great extent on how the machine is moved and operated. Carefully read the Operator's Manual before putting the machine into operation. This Operator's Manual will help to familiarize yourself more easily with the machine, thereby enabling you to use it more safely and efficiently.

Follow chapter "Safety Instructions" in particular. As a rule, keep the following in mind:

Careful and prudent working is the best way to avoid accidents!

Operational safety and readiness of the machine do not only depend on your skill, but also on maintenance and servicing of the machine. This is why regular maintenance and servicing is absolutely necessary.

Extensive maintenance and repair work must always be performed by a HCE service center. Use only original spare parts for repairs. This ensures operational safety and readiness of your machine, and maintains its value.

- Special equipment and superstructures are not described in this Operator's Manual.
- We reserve the right to improve the technical standard of our machines without adapting the Operator's Manual.
- Modifying HCE products and fitting them with additional equipment and attachments not included in our delivery program requires HCE's written authorization, otherwise warranty and product liability for possible damage caused by these modifications shall not be applicable.
- Subject to modifications and printing errors.

Your HCE dealer will be pleased to answer any further questions regarding the machine or the Operator's Manual.

Abbreviations/symbols

- Identifies a list
  - Subdivision within lists or an activity. Follow the steps in the recommended order

☞ *Identifies an activity*

➥ Description of the effects or results of an activity

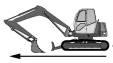
This symbol shows the travel direction – for better orientation in figures and graphics.

1.2 Machine overview

1 Boom light
2 Boom
3 Shovel arm
4 Track
5 Chassis
6 Stabilizer blade
7 Handhold
8 Lifting eye/tie-down point
9 Engine cover
10 Storage bin for Operator's Manual
11 Lock lever
12 ROPS rollbar (option)
13 Shatter protection (option)

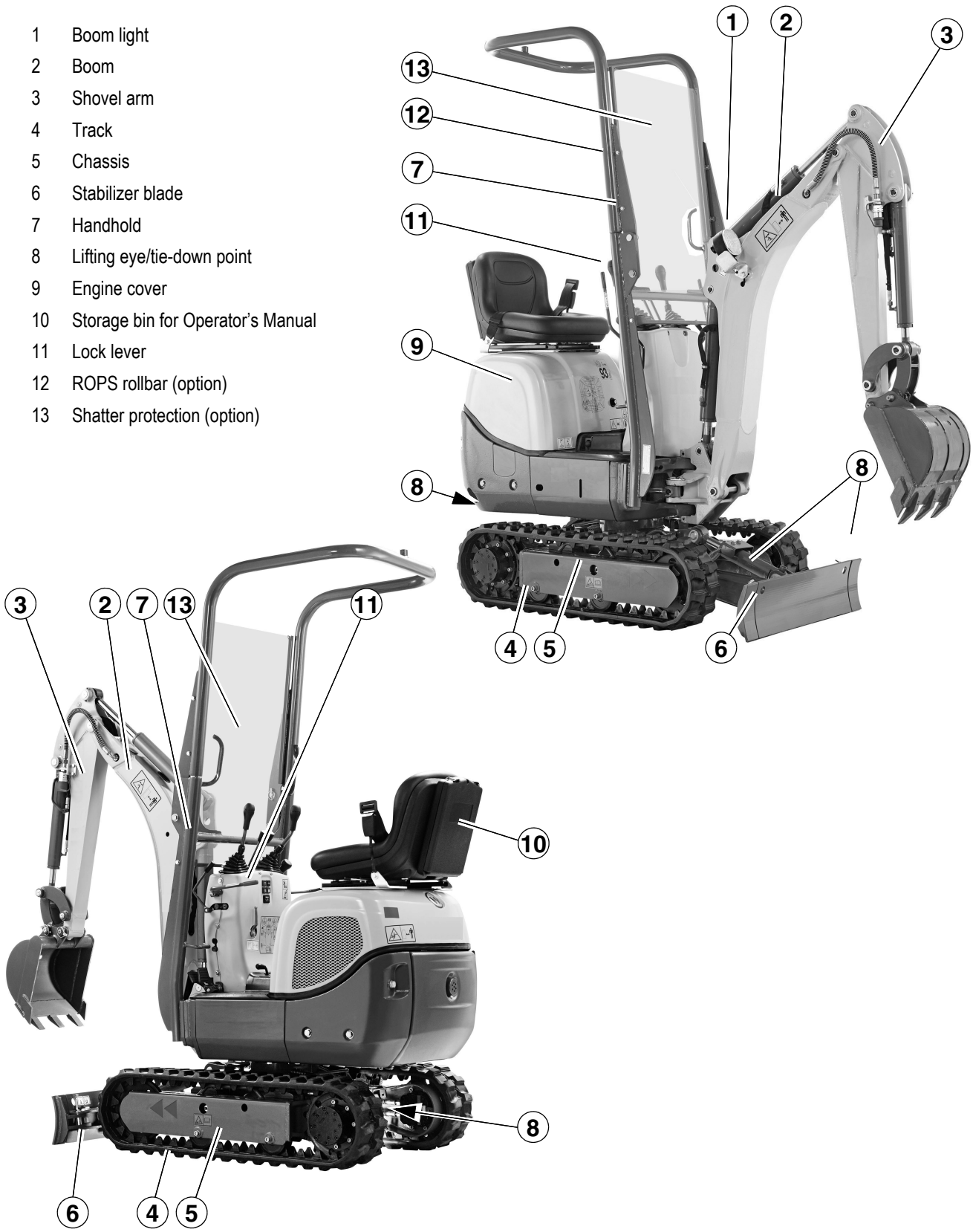

Fig. 1: Vehicle outside views

1.3 Brief description

The excavator is a self-propelled work machine.

Get informed on and follow the legal regulations of your country.

This machine is a versatile and powerful helper for moving earth, gravel and debris on construction sites and elsewhere. A wide range of attachments accounts for the numerous applications of the machine, including hammer operation.

See chapter Fields of application, attachments for further applications.

The main components of the vehicle are:

- Undercarriage
  - Tracked travel gear
  - Stabilizer blade
  - Live ring
- Upper carriage
  - Water-cooled diesel engine
  - Hydraulic and electrical components
- Boom

Information!

The machine can be equipped with the **"Telematic"** option (for transmitting operating data, location, etc. via satellite)!

Traveling drive

The diesel engine permanently drives two gear pumps the oil flow of which is sent to the hydraulic motor currently actuated.

Operating hydraulics

The diesel engine permanently drives two gear pumps the oil flow of which is sent to the operating hydraulics as required. The oil flow of these pumps depends on the diesel engine speed.

Cooling system

An indicator light on the instrument panel of the machine ensures constant monitoring of the engine oil and coolant temperature.

Definition of the term “Protective Structure”

Protective structures are additional elements that protect the operator or user against hazards. These elements can be installed later on or as standard equipment.

Explanation of abbreviations

ROPS:
Roll Over Protective Structure

MSWS:
Mechanical quickhitch

1.4 Rollbar

The rollbar has been specially designed for protection in case of an accident.

- ROPS tested rollbar (option).
- Shatter protection ; Protective structure against frontal flying fragments.

1.5 Mechanical integrity

DANGER

Accident hazard due to modified cabin and protective structures!

Incorrect work on the cabin and protective structures causes serious injury or death.

- No drilling, cutting or grinding on protective structures.
- Welding, straightening or bending work on protective structures is prohibited.
- Have damaged protective structures immediately replaced.

Information!

Check the rollbar and all protective structures once a day for damage.

Information!

Protective structures may only be installed or removed by a HCE service center.

Responsibility for vehicle equipped with protective structures

The decision regarding the necessary protective structures (type and level I or II) must be made by the machine owner and depends on the specific work situation.

The vehicle owner must observe the national regulations and he must inform the operator on the protective structure to be used in a specific work situation.

1.6 Fields of application, attachments

The attachments will decide in the first place how the excavator is used.

NOTICE

In order to avoid damage to the machine, only the attachments listed below have been certified.

- Please contact your HCE dealer if you wish to use other attach-ments.

Using tools of other manufacturers, or tools which have been released for other excavator types, can reduce the machine's output and stability considerably, and can also cause damage to the machine and injury to the operator or personnel.

Always compare the weight of the attachment and its maximum payload with the indications in the lift capacity table. Never exceed the maximum payload stated in the lift capacity table.

Information!

Please refer to the Operator's and maintenance manual of the attachment manufacturer for using and performing maintenance on attachments such as hammers, etc.

Use: attachment

Description of attachment	Weight	Capacity
Backhoe bucket B = 250 mm (10 in) (standard bucket)	15 kg (33 lbs)	0.014 m^3 (0.50 ft^3)
Backhoe bucket B = 300 mm (12 in)	21 kg (47 lbs)	0.018 m^3 (0.64 ft^3)
Backhoe bucket B=400 mm (15.7 in)	24.2 kg (54 lbs)	0.024 m^3 (0.85 ft^3)
Bucket B=700 mm (27.5 in)	32.6 kg (72 lbs)	0.033 m^3 (1.17 ft^3)
Hydraulic hammer NE06	63 kg (139 lbs)	--

1.7 Regulations

Requirements to be met by the operator

Earth moving machines may be driven and serviced only by persons who meet the following requirements:

- 18 years or older
- Physically and mentally suited for this work
- Persons have been instructed in driving and servicing the earth moving machine and have proven their qualifications to the contractor
- Persons are expected to perform work reliably.

They have been appointed by the contractor for driving and servicing the earth moving machine.

Observe the legal regulations of your country.

1.8 EC Declaration of Conformity

This declaration of conformity is issued under the sole responsibility of manufacturer:
HYUNDAI CONSTRUCTION EQUIPMENT CO., LTD.
12th Fl., Hyundai Bldg. 75, Yulgok-ro, Jongno-gu,
Seoul 03058, Korea

Hyundai Construction Equipment Europe N.V located at Hyundailaan 4, 3980 Tessenderlo, Belgium, as authorized repre sentative in the European Community is authorized to compile the technical construction file and declares that the product:

Type: *********
Model: ******
Serial number (PIN): **********

is in conformity with the relevant provisions of the Community harmonization legislation:
2006/42/EC - Machinery directive
2014/30/EU - Electromagnetic compatibility directive
2000/14/EC - Noise emission outdoor equipment directive
2002/44/EU - Exposure of workers to vibration risks directive
their amendments, and other applicable directives.

EMC (2014/30/EU)
Certificate number: **********
Date: DD/MM/YYYY
Notified body: **********

Noise levels (2000/14/EC)
Certificate number: **********
Date: DD/MM/YYYY
Conformity assessment proc.: Annex VIII Full Quality Assurance
Notified body: **********
****
Measured sound power level: nnn.n dB(A)
Guaranteed sound power level: nnn.n dB(A)

Engine information
Manufacturer : *********
Engine model name: ********
Type-approval number: **********
Stage (Regulation) : STAGE ** (**/**/**)
Gross Power (SAE J1995): ***kW / ****rpm
Net Power (SAE J1349): ***kW / ****rpm

Harmonized standards, other technical standards and specifications applied:
EN 474-1:2006+A*:**** (EMM - Safety - Part 1); EN 474-3:2006+A*:**** (EMM - Safety - Part 3); EN ISO 3471:2008 (EMM - ROPS: Lateral/Vertical/Longitudinal loads); EN ISO 3449:2008 (EMM - FOPS: Level II cabin); ISO 2631-1:1997 & ISO 2631-1:1997/Amd1 :2010 (Whole-body vibration); EN ISO 5349-1:2001 &EN ISO 5349-2:2001 & EN ISO 5349-2:2001/A1:2015 (Hand-arm vibration)

****
Managing Director
Place, date of issue: Tessenderlo Belgium, DD MM YYYY

1.9 Type labels and component numbers

Information!

Type, quantity, and position of the labels depend on options, country and vehicle.

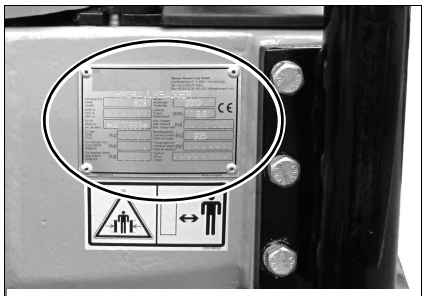

Fig. 1: Type label: location (symbolic representation)

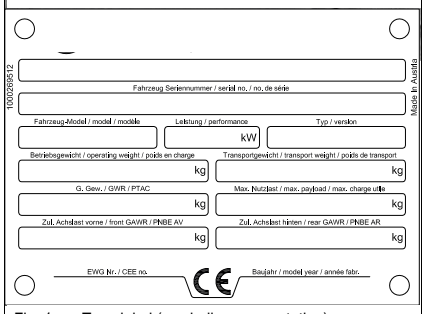

Fig. 1: Type label (symbolic representation)

Serial number

The serial number is stamped on the machine chassis. It is also located on the type label.

The type label is located at the front right on the machine chassis (at control stand level).

Type label information (example):

Machine designation:		HYDRAULIC EXCAVATOR
Model:		----------
Model year:		----------
CEE no.	(EWG no.)	----------
Output:		----------
Serial no.:		----------
Max. payload:		----------
GWR:		----------
Operating weight:		----------
Front GAWR:		----------
Transport weight:		----------
Rear GAWR:		----------
Version:		----------

Other information – *see chapter 6 Technical data* on page 6-1

Fig. 2: ROPS bar type label (symbolic representation)

ROPS bar type label

The type label is located at the front right, on one side of the rollbar.

Fig. 3: Diesel engine number (symbolic representation)

Engine number

The type label is located on the cylinder-head cover (engine).

1.10 Overview of adhesive labels

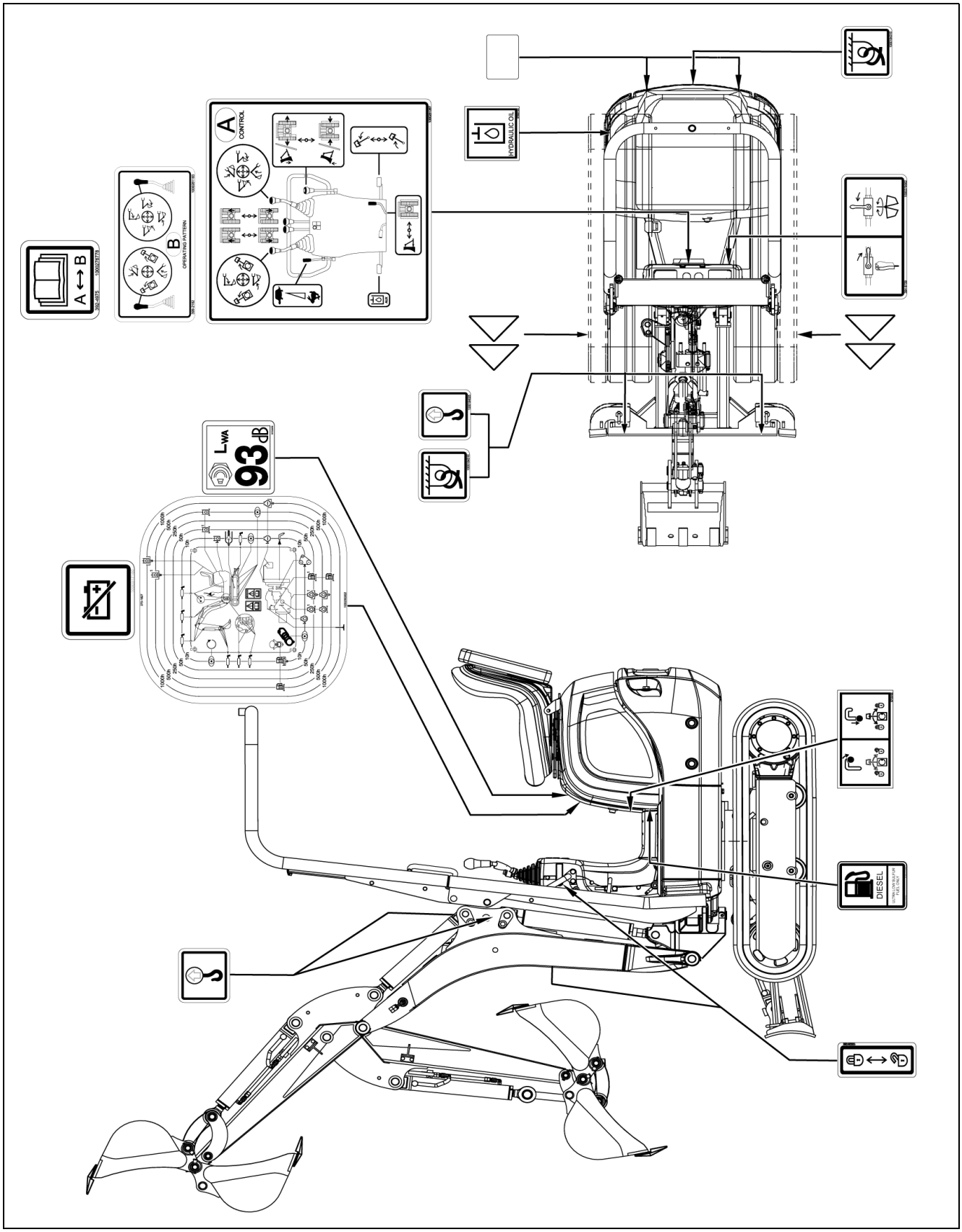

The following states signs and symbols that do not contain explanatory text and that are not explained in the following chapters.

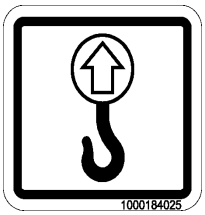

Fig. 4: Lifting eyes

Meaning

Machine is raised by the lifting eyes

– *see chapter* *Crane-lifting the machine* on page 3-37

Position

On either side of the stabilizer blade, and on either side of the boom

Fig. 5: Tie-down points

Meaning

Indicates the tie-down points for tying down the machine.

The mounting points are used for tying down the machine during loading and transportation

– *see chapter* *Tying down the machine* on page 3-40

Position

On either side of the stabilizer blade, at the center of the undercarriage

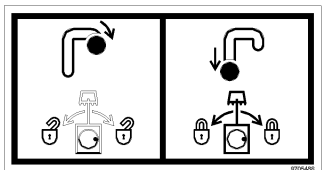

Fig. 6: Swivel unit lock

Meaning

This label shows how to lock the upper carriage.

Position

On the front side of the engine cover

Fig. 7: Noise level indication

Meaning

Noise levels produced by the machine.

L_{WA} = sound power level

Other information – *see chapter 6.8* *Noise measurement* on page 6-6

Position

On the front side of the engine cover

Fig. 8: Hydraulic oil

Meaning

The reservoir contains hydraulic oil.

Position

On the hydraulic oil reservoir

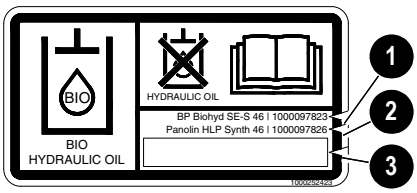

Fig. 9: Biodegradable hydraulic oil

Meaning (option)

The reservoir contains biodegradable hydraulic oil.

This label is notched on the side depending on the biodegradable hydraulic oil used.

1 BP Biohyd SE-S 46

2 Panolin HLP Synth 46

3 Other producer of biodegradable hydraulic oil

During operation with a zero-emission power unit, there must be no biodegradable hydraulic oil in the excavator or power unit.

Position

Under the engine cover on the hydraulic oil reservoir

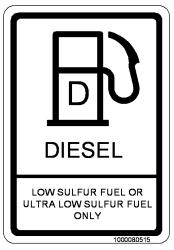

Fig. 10: Diesel

Meaning

Only refuel diesel fuel with a low sulfur content!

– see chapter 5.15 Fluids and lubricants on page 5-34

Position

On the fuel tank

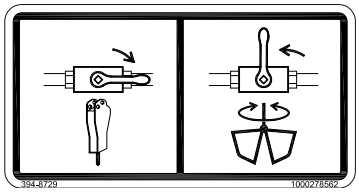

Fig. 11: Hammer/grab operation

Meaning (option)

Changeover from hammer to grab operation.

Position

On the control stand

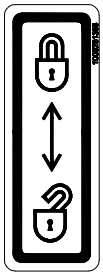

Fig. 12: Lock lever

Meaning

This label shows how to lock the control levers.

Position

On either side of the control stand

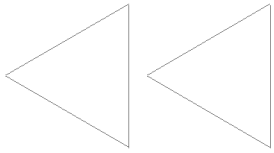

Fig. 13: Direction indicator

Meaning

This label shows the forward travel direction.

Position

On either side of the undercarriage

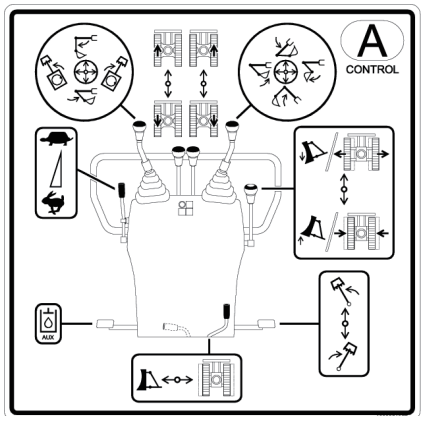

Fig. 14: Controls

Meaning

This label describes the pedal and control lever functions.

– see chapter 3.11 Control lever overview on page 3-45

Position

On the control stand

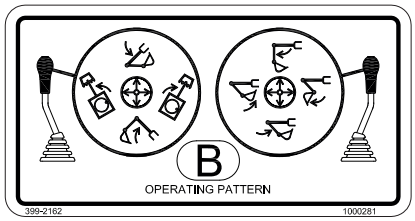

Fig. 15: SAE controls

Meaning

Indicates the control operations that do not comply with the ISO standard if the SAE controls are selected.

Position

On the control stand

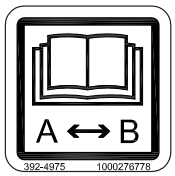

Fig. 16: ISO/SAE changeover

Meaning

Check before starting the machine the operating pattern that has been chosen.

Wiring diagram	Controls	
A	ISO controls (Europe)	Operating Pattern A
B	SAE controls (US)	Operating Pattern B

Position

On the control stand

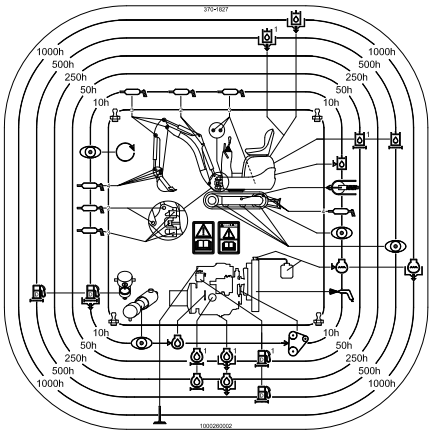

Fig. 17: Maintenance plan

Meaning
Maintenance plan
Position
On the front side of the engine cover

Fig. 18: Maintenance plan

Meaning
Battery master switch
Position
On the front side of the engine cover

1.11 Overview of safety labels

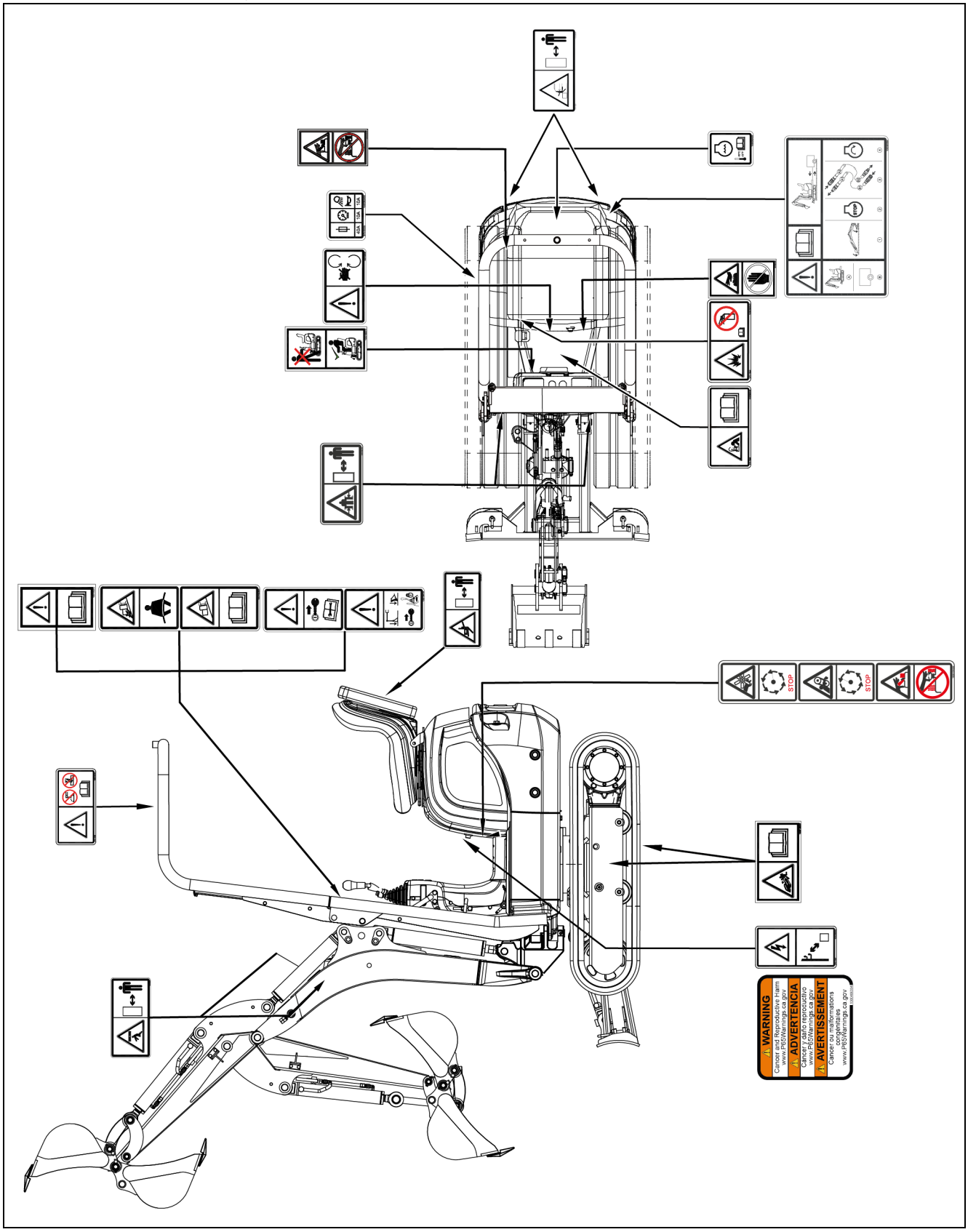

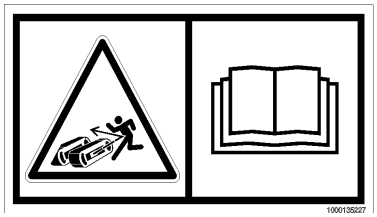

Fig. 19: Tightening the tracks

Meaning

- Danger due to grease squirting out!
- Always read the Operator's Manual before working with the track tensioner.

Position

On either side of the travel gear.

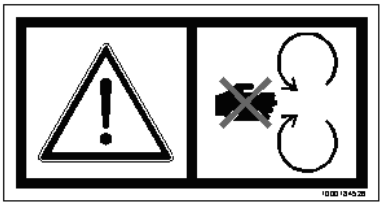

Fig. 20: Stop the engine

Meaning

Caution, danger due to rotating and moving parts!

Stop the engine before opening or removing the safety devices (for example engine cover, fan guard ...)

Position

On the front side of the engine cover

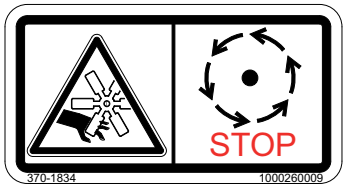

Fig. 21: Fan in engine compartment

Meaning

- Caution, rotating fan!

  Stop the engine before opening the engine cover!

  Stay clear of the engine compartment if the fan is still running!

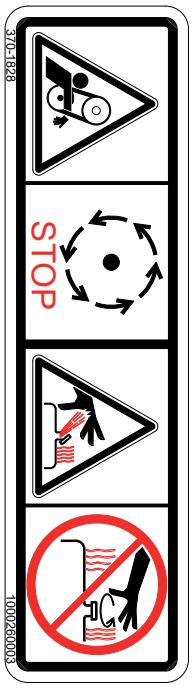

Fig. 22: Hydraulic oil reservoir under pressure

Meaning

Caution, danger due to rotating and moving parts!

Stay clear of the engine compartment with the engine running!

Perform work in the engine compartment at engine standstill only.

- Caution, the reservoir is hot and under pressure!

  Allow the reservoir to cool down!

  Carefully and slowly open the cover only after the reservoir has cooled down, to release the pressure.

  Wear suitable protective clothing to open the cover.

Position

In the engine compartment

Fig. 23: Reservoir under pressure

Meaning

Caution, the reservoir is hot and under pressure!

- Allow the fluids to cool down!

  Carefully and slowly open the cover only after the reservoir has cooled down, to release the pressure.

  Wear suitable protective clothing and safety glasses to open the cover.

Position

On the hydraulic oil reservoir

Fig. 24: Hot surfaces

Meaning

Caution, burn hazard due to hot surfaces!

- Do not touch surfaces, wait for parts to cool down.

Position

In the engine compartment

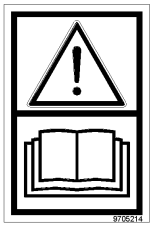

Fig. 25: Read and understand the Operator's Manual

Meaning

Caution, read the Operator's Manual before starting the machine!

The machine may be put into operation only if you read, understand and observe the Operator's Manual.

Position

At the front on the engine cover (standard).

On the left on the rollbar (option).

Fig. 26: Warnings

Meaning

Caution, danger of serious or fatal injury!

- Operate the machine only when seated on the seat.
- Machine operation is only allowed if the rollbar is raised and locked, and if the seat belt is fastened.
- Machine operation with the rollbar lowered is prohibited.

Caution, danger of serious or fatal injury!

- Always work ensuring machine stability, do not overload the machine and use only attachments that have been released by the manufacturer. Always work on firm ground. Follow the instructions given in the Operator's Manual.

Position

At the front on the engine cover (standard).

On the left on the rollbar (option).

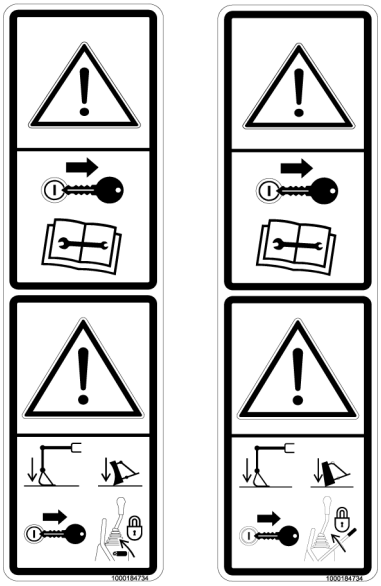

Fig. 27: Warnings

Meaning

Caution, danger of unintentional machine operation!

Danger of serious crushing of body!

- Before performing maintenance and repair work, stop the engine, raise the lock lever and remove the starting key.
  The key must be kept by the operator.

Position

At the front on the engine cover (standard).

On the left on the rollbar (option).

Caution, danger of serious or fatal injury!

- Lower the boom and the stabilizer blade to the ground before leaving the machine, stop the engine, raise the lock lever and remove the starting key.

Position

At the front on the engine cover (standard).

On the left on the rollbar (option).

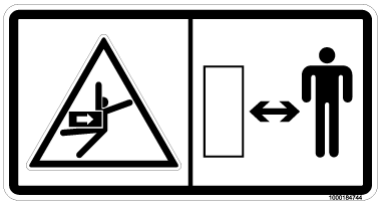

Fig. 28: Swiveling range

Meaning
Caution, danger of serious crushing of body!
Stay clear of the machine's slewing range during operation.
Position
At the rear left

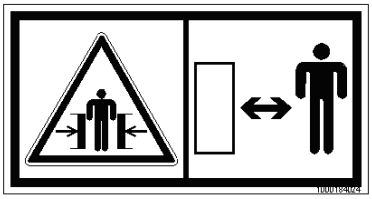

Fig. 29: Swiveling range

Meaning
Caution, danger of serious crushing of body!
Stay clear of the machine's slewing range during operation.
Position
At the front left and right of the chassis

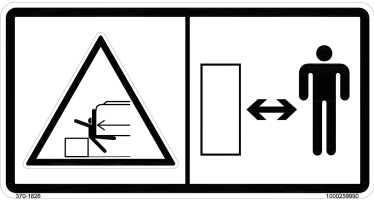

Fig. 30: Swiveling range of the rear weight

Meaning
Caution, danger of serious crushing of body!
Stay clear of the machine's slewing range during operation.
Position
On the rear weight left and right

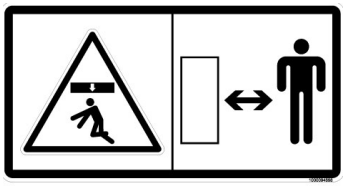

Fig. 31: Boom operation

Meaning
Caution, danger of serious or fatal injury!
Stay clear of the machine's work range during operation.
Position
On either side of the boom

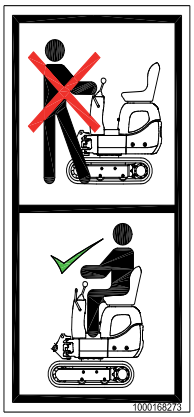

Fig. 32: Use the lock lever

Meaning
Caution, danger of serious or fatal injury!
Operate the machine only when seated on the seat.
Before leaving the seat, raise the lock lever to prevent unintentional movements!
Stay clear of the machine's slewing range during operation.

Position
At the right on the control stand

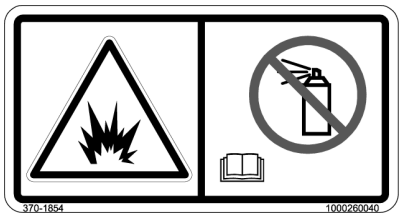

Fig. 33: Do not use ether

Meaning

Caution, danger of serious or fatal injury!

Caution, danger of powerful explosions!

Do not use ether!

This machine is equipped with an intake-air preheating system. Using ether can cause explosions or fire, which in turn can cause death or serious injury.

Position

In the engine compartment on the air intake hose

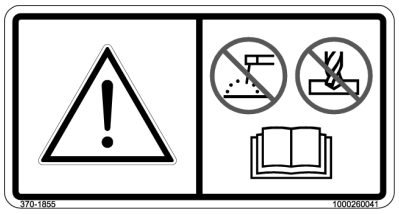

Fig. 34: Do not drill holes or weld the ROPS structure

Meaning (option, only for mach ines equipped with ROPS bar)

Caution, danger of serious or fatal injury!

Structural damage, roll-over accidents, retrofitting work, structural modifications or improper repair work affect the protective effect.

Do not drill holes or perform welding on this structure. Have the vehicle serviced and repaired only by an authorized service center.

Position

On the ROPS bar

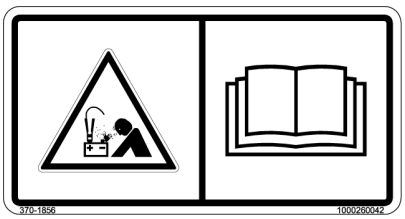

Fig. 35: Danger of explosion

Meaning

Caution, danger of powerful explosions!

Connecting jump leads incorrectly can cause explosions and personal injury with possible death.

Always wear safety glasses and protective clothing.

Follow the specific battery safety instructions!

Position

Near the battery

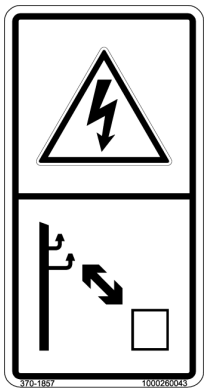

Fig. 36: Danger near high-voltage lines

Meaning

Caution, danger of fatal electric shock!

Keep a safe distance from high-voltage lines. Always keep a safe distance from electrically conductive parts with the machine and the equipment.

Position

On the control stand

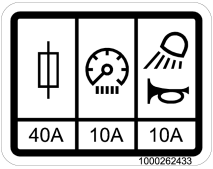

Fig. 37: Fuses

Meaning

Fuse assignment.

Use only original fuses with the specified current rating!

Position

Behind the right-hand trim

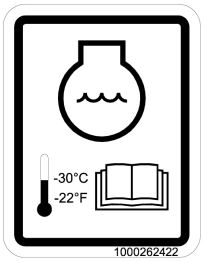

Fig. 38: Coolant

Meaning

The coolant must have a thermal stability of –30 °C (–22 °F).

– *see chapter 6.10 Coolant compound table* on page 6-9

Position

On the inside of the engine cover

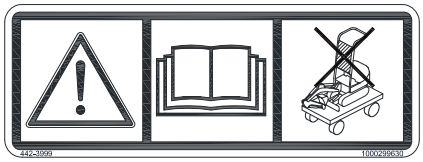

Fig. 39: Removing the shatter protection

Meaning (option)

Remove the shatter protection if the machine is transported on an open platform.

Position

On the shatter protection at the upper left in travel direction.

Information!

If an additional cross brace is installed, the shat-ter protection does not have to be removed before transporting the machine on an open platform.

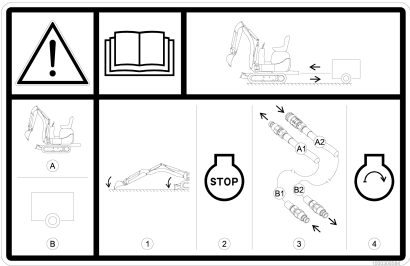

Fig. 40: Dual Power connection

Meaning (option)

Read the Operator's Manual before connecting lines.

Position

At the rear left.

Fig. 41: California 65 proposal

2 Safety instructions

2.1 Identification of warnings and dangers

Important indications regarding the safety of the personnel and the machine are identified in this Operator's Manual with the following terms and symbols:

DANGER

DANGER identifies a situation causing death or serious injury if it is not avoided.

Consequences in case of non-observance.

- Avoidance of injury or death.

WARNING

WARNING identifies a situation that can cause death or serious injury if it is not avoided.

Consequences in case of non-observance.

- Avoidance of injury or death.

CAUTION

CAUTION identifies a situation that can cause injury if it is not avoided.

Consequences in case of non-observance.

- Avoidance of injury or death.

NOTICE

Failure to observe the instructions identified by this symbol can cause damage to the machine.

- Measures for avoiding danger for the vehicle

Information!

This symbol identifies instructions for a more efficient and economical use of the vehicle.

Environment!

Failure to observe the instructions identified by this symbol can cause damage to the environment. The environment is in danger if environmentally hazardous material (for example waste oil) is not subject to proper use or disposal.

2.2 Warranty

Warranty claims can be made only if the conditions of warranty have been observed. They are included in the General Conditions of Sales and Delivery for new machines and spare parts sold by the dealers of HCE.

Warranty claims can be brought forward to your HCE dealer only.

Furthermore, all instructions in this Operator's Manual must be observed.

2.3 Disposal

All fluids, lubricants, material, etc., used on the machine are subject to specific regulations regarding collection and disposal. Dispose of different materials and consumables separately and in an environmentally friendly manner!

Disposal may only be performed by a HCE dealer. Also observe the national regulations regarding disposal!

Environment!

Avoid damage to the environment! Do not allow the oil and oily wastes to get into the ground or stretches of water!

2.4 Designated use and exemption from liability

- The vehicle is intended for:
  - •Moving earth, gravel, coarse gravel or ballast and rubble.
  - •Every other application is regarded as not designated. HCE will not be liable for damage resulting from use other than mentioned above. The operator alone will bear the risk.
  - •Designated use also includes observing the instructions set forth in the Operator's Manual and observing the maintenance and service conditions.
- The safety of the vehicle can be negatively affected by performing vehicle modifications without proper authority and by using spare parts, equipment, attachments and optional equipment that have not been checked and released by HCE.
  HCE will not be liable for damage resulting from this.
- HCE shall not be liable for injury and/or damage to property caused by failure to observe the safety instructions and the operator's manual, and by the negligence of the duty to exercise due care when:
  - •Handling
  - •Operating
  - •Servicing and performing maintenance
  - •Repairing the machine. This is also applicable in those cases in which special attention has not been drawn to the duty to exercise due care, in the safety instructions, the Operator's Manuals and maintenance manuals (machine/ engine).
  - •Read and understand the Operator's Manual before starting up, servicing, or repairing the machine. Observe all safety instructions!
- The machine may not be used for transport jobs on public roads!
- Hammer operation is only allowed in specified areas.
- Do not operate the vehicle in radioactively, biologically or chemically contaminated areas.

2.5 General conduct and safety instructions

Organizational measures

- The machine has been designed and built in accordance with state-of-the-art standards and the recognized safety regulations. Nevertheless, its use can pose a risk to life and limb of the user or of third parties, or cause damage to the machine and to other material property.
- The machine must only be used in technically perfect condition in accordance with its designated use and the instructions set forth in the Operator's Manual, and only by safety-conscious persons who are fully aware of the risks involved in operating the machine. Any malfunctions, especially those affecting safety, must therefore be rectified immediately!
  Basic rule
  Before putting the machine into operation, inspect the machine for safety in work operation!
- Careful and prudent working is the best way to avoid accidents!
- The Operator's Manual must always be at hand at the place of use of the machine, and must therefore be kept in the document box at the rear of the seat.
  Immediately complete or replace an incomplete or illegible Operator's Manual!
- In addition to the Operator's Manual, observe and instruct the operator in all other generally applicable, legal and other mandatory regulations relevant to accident prevention and environmental protection.
  These compulsory regulations may also deal with handling hazardous substances, issuing and/or wearing personal protective equipment, or traffic regulations.
- With regard to specific operational features, for example those relevant to job organization, work sequences or the persons entrusted with the work, supplement the Operator's Manual by corresponding instructions, including those relevant to supervising and reporting duties.
- Persons entrusted with work on the machine must have read and understood the Operator's Manual and in particular, chapter "Safety Instructions" before beginning work. This applies especially to persons working only occasionally on the machine, for example for set-up or maintenance.
- The user/owner must check – at least from time to time – whether the persons entrusted with operation or maintenance are working in compliance with the Operator's Manual and are aware of risks and safety factors.
- The user/owner commits himself to operate and keep the machine in perfect condition, and, if necessary or required by law, to require the operating or servicing persons to wear protective clothing, etc.
- In the event of safety-relevant modifications or changes on the machine or of its behavior, stop the machine immediately and report the malfunction to the competent authority/person.
  Safety-relevant damage or malfunctions of the machine must be rectified immediately!
- Never make any modifications, additions or conversions to the machine and its superstructures, as well as to the attachments, which might affect safety without the approval of HCE ! This also applies to the installation and the adjustment of safety devices and valves, as well as to welding work on load-bearing elements.
- Spare parts must comply with the technical requirements specified by HCE.
  Original spare parts can be relied to do so.
- Replace hydraulic hoses within stipulated and appropriate intervals even if no safety-relevant malfunctions have been detected.

- Before working on or with the machine, remove jewelry, such as rings, wristwatches, bracelets, etc. Tie back long hair and do not wear loose-fitting garments, such as unbuttoned or unzipped jackets, ties or scarves.
  Injury can result from being caught up in the machinery or from rings catching on moving parts!
- Keep the machine clean. This reduces:
  - •Fire hazard, for example due to oil-soaked rags lying around
  - •Injury hazard, for example due to dirt or debris on the footholds, and
  - •Accident hazard for example due to dirt pile-up on the pedals
- Observe all safety, warning and information signs and labels on the machine!
- Adhere to prescribed intervals or those specified in the Operator's Manual for routine checks/inspections and maintenance!
- Tools and workshop equipment adapted to the task on hand are absolutely indispensable for performing service, inspection, maintenance or repair work!

Selection and qualification of personnel, basic responsibilities

- Any work on or with the machine must be performed by reliable personnel only. Do not let unauthorized persons perform machine travel or operation! Observe statutory minimum age limits!
- Employ only trained or instructed personnel on the machine, and clearly and unequivocally define the individual responsibilities of the personnel for operation, set-up, maintenance and repair!
- Define the machine operator's responsibilities – also with regard to observing traffic regulations. Give the operator the authority to refuse instructions by third parties that are contrary to safety.
- Do not allow persons to be trained or instructed or persons taking part in a general training course to work on or with the machine without being permanently supervised by an experienced person!
- Work on the electrical system and equipment, on the travel gear and the steering and braking systems may be performed only by skilled personnel which has been specially trained for such work. Work on the hydraulic system of the machine must only be performed by personnel with special knowledge and experience in hydraulic equipment!
- Seal off the danger zone should it not be possible to keep a safe distance.
  Stop machine operation if persons do not leave the danger zone in spite of warning!
  Keep out of the danger zone!

Danger zone:

The danger zone is the area in which persons are in danger due to the movements of the

- •vehicle
- •work equipment
- •additional equipment or
- •material

This also includes the area affected by falling material, equipment or by parts that are thrown out. The danger zone must be extended by 0.5 m (20 in) in the immediate vicinity of

- •buildings
- •scaffolds or
- •other elements of construction

2.6 Safety instructions regarding operation

Normal operation

- Putting the machine into operation and operating it with a raised rollbar is allowed only if the seat belt is fastened and tightened.
- Before releasing the seat belt, raise the lock lever and stop the engine to avoid unintentional operation.
- Operate the machine only when seated on the seat.
  - •The operator must touch the backrest with his back.
  - •When operating the machine, always leave your feet on the pedals or footrests/floor mats.

  ➥ Do not press the pedals unintentionally!

  ➥ Feet must not protrude beyond the floor mat – danger of crushing!
  - •Before leaving the seat, raise the lock lever to prevent unintentional movements!
- Avoid any operational mode that might be prejudicial to safety!
- Apart from the operator, no other persons are allowed to ride on the machine.
- Before beginning work, familiarize yourself with the surroundings and circumstances of the job site. These are, for example, obstacles in the job site and travel area, the soil bearing capacity and any necessary barriers separating the job site from public roads.
- When driving across a slope with the telescopic travel gear extended, position the boom facing down the slope, and the bucket about 20 – 30 cm (8 – 12 in) above the ground, in order to reduce injury and damage to a minimum in the event of a hose rupture on the telescopic cylinder. A hose rupture might cause the travel gear to retract and jeopardize the machine's stability.
- Take the necessary precautions to ensure that the machine is used only when in a safe and reliable state!
  Operate the machine only if all protective and safety-oriented devices, for example removable safety devices, soundproofing elements, etc., are in place and fully functional!
- Check the machine at least once a day/per work shift for visible damage and malfunctions! Report any changes (incl. changes in working behavior) to the competent organization/person immediately! If necessary, stop the machine immediately and lock it!

- In the event of malfunctions, stop the machine immediately and lock it! Have any malfunctions rectified immediately!
- Perform start-up and shut-down procedures in accordance with the Operator's Manual, and observe the indicator lights!
- Before putting the machine/attachment into operation (start-up/moving), ensure that no one is at risk by putting the machine/attachment into operation!
- Before driving with the machine, and also after interrupting work, check whether the drive levers, the signaling and the light systems are functional!
- Before starting machine travel always check whether the supplementary equipment and the attachments have been safely stowed away or attached!
- During machine travel on public roads, ways and places, observe the valid traffic regulations and, if necessary, ensure beforehand that the machine is in a condition perfectly compatible with these regulations!
- Always switch on the lights in conditions of poor visibility and after dark!
- No lifting, lowering or carrying persons in the work equipment/attachments!
- Installing a man basket or a working platform is prohibited!
- When crossing underpasses, bridges and tunnels, or when passing under overhead lines always ensure that there is enough clearance!
- Always keep a safe distance from the edges of building pits and slopes!
- When working in buildings or in enclosed areas, look out for in particular:
    - •Height of the ceiling/clearances
    - •Width of entrances
    - •Maximum load of ceilings and floors
    - •Sufficient room ventilation – poisoning hazard!
- Avoid any operation that might be a risk to machine stability!
- During operation on slopes, move or work uphill or downhill. If performing machine travel across a slope cannot be avoided, bear in mind the tilting limit of the machine! Always keep the attachments/work equipment close to the ground. This also applies to downhill machine travel!
- On sloping terrain always adapt the travel speed to the prevailing ground conditions!
- Secure the machine against unintentional movement and unauthorized use!
  Lower the attachments to the ground.

- Before starting work check whether
  - •all safety devices are properly installed and functional.
- Before starting machine travel or before taking up work:
  - •Ensure that visibility is sufficient
  - •Adjust your correct seat position, never adjust the operator seat during machine travel or operation!
  - •Fasten your seat belt (with ROPS rollbar option)
  - •Inspect the immediate area.
  - •On the job site the operator is responsible for third parties!
- Caution when handling fuel – increased fire hazard!
  - •Ensure that fuel does not come into contact with hot parts!
    Do not smoke during refueling, and avoid fire and sparks. Stop the engine during refueling and do not smoke!
- Never get on or off a moving machine! Never jump off the machine!
- Should the lights of the machine not be sufficient for performing work safely, provide additional lighting of the job site.
- Installed work lights must not be switched on for travel on public roads. They can be switched on in work operation if motorists are not blinded.
- Use an external light source in case of poor illumination of the job site. If this is not enough to illuminate the job site sufficiently, stop machine operation and start it again when sufficient illumination can be ensured.
- The pedals take time getting used to them. Travel speed must be adapted to your skills and to the prevailing conditions.
- Operation in areas involving a risk of falling objects is prohibited.
- Operation in environments with fragments flying around is only allowed with a shatter protection and on the job site defined for this.
- Machine operation is only allowed if the rollbar is raised and locked, and if the seat belt is fastened.
  - •Machine operation with the rollbar lowered is prohibited.

Operation with lowered ROPS rollbar

WARNING

Danger of serious crushing of body and of death!

Causes serious injury or death.

- Depending on the situation, traveling over very short distances with a lowered rollbar is allowed (for example in case of low clearance heights), however only if the following conditions are fulfilled:
  - Obtain the approval of the appropriate national authority.
  - Working with a lowered rollbar is prohibited under all circumstances.
  - Machine travel is only allowed on absolutely level ground.
  - Avoid tipping movements of the machine under all circumstances.
  - Operation in areas involving a risk of falling objects is prohibited.
  - Do not fasten the seat belt in order to be able to leave the machine immediately in an emergency.
  - Wear protective equipment (for example protective clothing, safety glasses).

Checks when reversing the machine

- Careful when reversing the machine – accident hazard!
- Persons in the blind spot of the machine cannot be seen by the operator.
- Ensure that nobody is within the danger zone of the machine when changing the driving direction!

Lifting gear applications

Applications with lifting gear are understood as procedures involving raising, transporting and lowering loads with the help of slings and load-securing devices (for example ropes, chains). In doing so, the help of persons is necessary for securing and detaching the load. This applies, for example, to lifting and lowering pipes, shaft rings or containers.

NOTICE
No applications with lifting gear!

Working with attachments

- Prior to driving the machine, remove all attachments which cannot be secured in compliance with the legal regulations of your country!
- Attachments affect handling and the machine's steering capability!
- Fit the attachments with the specially required devices only!
- Before uncoupling or coupling hydraulic lines (hydraulic quick couplers)
  - •Stop the engine
  - •Relieve hydraulic oil pressure in the hydraulic system; Do this by moving the operating levers of the hydraulic control units back and forth several times.
- Coupling attachments requires special care!
- Secure the attachments against unintentional movement!
- Operate the machine only if all protective facilities have been installed and are functional, and if all brake, light and hydraulic connections have been connected!
- If optional equipment is installed, all lighting equipment, indicator lights, etc. that are required in addition must be installed and functional.
- Install the attachments only if the engine and the drive have been switched off.
- Ensure that the attachment is safely locked with the machine. Check again before starting work.
- Raise the lock lever before installing attachments on the stick.
- Be careful when coupling attachments to the machine: injury hazard due to crushing and shearing. Ensure that nobody is between the machine and the attachment!

Transportation

- The machine must be towed, loaded and transported only in accordance with the Operator's Manual!
- For towing the machine observe the prescribed transport position, permissible speed and itinerary.
- Use only suitable means of transport of appropriate capacity/payload!
- Safely secure the machine on means of transport! Use suitable tie-down points and load-securing devices.
- The recommissioning procedure must be strictly in accordance with the Operator's Manual!

Working in the area of underground electric lines

- Before starting any work, the machine operator must ensure that there are no lines on the job site.
- If you are not sure, contact the person in charge at the network operator.
- If there are lines, take the following safety measures:
  - •Mark the position and path of the lines unambiguously
  - •Fasten, support or secure exposed lines
  - •Safely fasten lines if vibration or shocks to these lines must be avoided

Working near overhead electric lines

DANGER

Death hazard due to electric shock!

Causes serious injury or death.

- During machine operation, maintain a safe distance from overhead electric lines!
- If work must be performed close to overhead lines, the equipment/attachments must be kept well away from them.

Rated voltage (volts)	Safety distance	
	Meters	Feet
Up to 1000 V	1 m	3.3 ft
Over 1 kV to 110 kV	3 m	9.8 ft
Over 110 kV and up to 220 kV	4 m	13.1 ft.
Over 220 kV and up to 380 kV	5 m	16.4 ft
Unknown rated voltage	5 m	16.4 ft

- If no sufficient distance can be kept to overhead electric lines, the machine operator must take other safety measures, for example switching off the current, in agreement with the owner or operator of the lines.
- If an energized line is touched nevertheless:
  - •Do not leave the machine
  - •Drive the machine out of the danger zone
  - •Warn others against approaching and touching the machine
  - •Have the live wire de-energized
  - •The operator must not touch any metallic parts
  - •Do not leave the machine until the line that has been touched or damaged has been safely de-energized!

2.7 Safety instructions for maintenance

- Avoid any operational mode that might be prejudicial to safety!
- Operational readiness and the service life of machines are heavily dependent on maintenance.
- It is therefore in the interest of the machine owner to perform the mandatory maintenance.
- The manufacturer requires the owner to perform maintenance under all circumstances. Otherwise warranty shall not be given in full.
- Observe the adjustment, maintenance and inspection activities and intervals set forth in the Operator's Manual, including information on the replacement of parts/partial equipment! These activities may only be performed by a HCE service center.
- The machine may not be serviced, repaired or test-driven by unauthorized personnel.
- Brief operating personnel/operator before beginning special operations and maintenance! Appoint a person to supervise the activities!
- In any work concerning the operation, conversion or adjustment of the machine and its safety-oriented devices, or any work related to maintenance, inspection and repair, observe the start-up and shut-down procedures set forth in the Operator's Manual, and the information on maintenance.
- If required, secure the maintenance area appropriately!
- Prior to performing service, maintenance and repair work, attach warning labels, such as "Repair work – do not start machine!", to the starter or to the control elements. Remove the starting key!
- Perform service, maintenance and repair work only if
  - •the machine is positioned on firm and level ground
  - •Lower the work equipment/attachments to the ground
  - •Stop the engine
  - •Raise the lock lever
  - •Starting key removed
  - •Move the control levers
  - •The machine has been secured against unintentional movement
- Should maintenance or repair be inevitable with the engine running:
  - •Lower the stabilizer blade and raise the lock lever
  - •Only work in groups of two
  - •Both persons must be authorized for the operation of the machine
  - •One person must be seated on the seat and maintain visual contact with the other person
  - •Observe the specific safety instructions in the work manual
  - •Keep a safe distance from all rotating and moving parts, for example fan blades, V-belt drives, fans, etc.
- Prior to performing assembly work on the machine, ensure that no movable parts will roll away or start moving.
- To avoid accident hazard, parts and large assemblies being moved for replacement purposes must be carefully attached and secured to lifting gear.
  Use only suitable lifting gear and suspension systems in a technically perfect state with appropriate load-bearing capacity!
  Stay clear of suspended loads!
- Have loads fastened and crane operators guided by experienced persons only!
  The person guiding the operator must be within sight or sound of him.

- Disconnect the negative terminal of the battery if work needs to be performed on the electrical system.
- Always use specially designed or otherwise safety-oriented ladders and working platforms to perform overhead assembly work. Never use machine parts or attachments/superstructures as a climbing aid! Wear a safety harness when performing maintenance at greater heights! Keep all handholds, steps, handrails, platforms, landings and ladders free from dirt, snow and ice!
- Clean the machine, especially connections and threaded unions, of any traces of oil, fuel or preservatives before performing maintenance/repair work!
  Do not use aggressive detergents!
  Use lint-free cleaning rags!
- Before cleaning the machine with water, steam jet (high-pressure cleaner) or detergents, cover or tape up all openings which – for safety and functional reasons – must be protected against water, steam or detergent penetration. Special care must be taken with the electrical system.
- After cleaning, remove all covers and tapes applied for that purpose!
- After cleaning, examine all fuel, lubricant and hydraulic oil lines for leaks, chafe marks and damage!
  Rectify all malfunctions without delay!
- Always retighten any threaded fittings that have been loosened during maintenance and repair!
- Any safety devices removed for set-up, maintenance or repair purposes must be refitted and checked immediately upon completion of the maintenance and repair work.
- Ensure that all consumables and replaced parts are disposed of safely and with minimum environmental impact!
- Do not use the work equipment as lifting platforms for persons!
- Before taking up work on machine parts dangerous for life and limb (bruising, cutting), always ensure safe blocking/support of these areas.
- Perform maintenance and repair work beneath a raised machine, attachments or additional equipment only if a safe and secure support has been provided for (the sole use of hydraulic cylinders, jacks, etc. does not sufficiently secure raised machines or equipment/attachments).
- Avoid contact with hot parts, such as the engine block or the exhaust system during the operation of the machine and for some time afterward – burn hazard!
- Remove retainer pins slowly and carefully – injury hazard!
- Using starting fuel is prohibited! This applies in particular if the intake-air preheating is used at the same time – explosion hazard!
- Apply special care when working on the fuel system – increased fire hazard!
- During maintenance, ensure that there is a fire extinguisher on the job site.
- Before performing (maintenance) work on the machine, remove all jewelry, such as rings, watches and bracelets. Tie back long hair, and button up or zip up loose-fitting garments.
  Injury can result from hair, jewelry or garments getting caught on moving parts!
- Always wear a hard hat and safety shoes when performing work or maintenance on the machine. If necessary, wear protective clothing, safety glasses, masks, gloves and ear protectors.

2.8 Warning of special hazards

Electrical energy

- Use only original fuses with the specified current rating!
  Switch off the machine immediately, disconnect the battery and rectify the malfunction if trouble occurs in the electrical system!
- Work on the electrical system may only be performed by a technician with appropriate training, in accordance with the applicable electrical engineering rules.
- Inspect and check the electric equipment of the machine at regular intervals. Malfunctions such as loose connections or scorched cables must be rectified immediately.
- Observe the operating voltage of the machine/attachments!
- Always remove the grounding strap from the battery when working on the electrical system or when performing welding work!
- Starting with battery jumper cables can be hazardous if performed improperly. Observe the safety instructions regarding the battery!
- – *see chapter Working near overhead electric lines* on page 2-11
- – *see chapter Working in the area of underground electric lines* on page 2-11

Gas, dust, steam, smoke

- Operate the machine only on appropriately ventilated premises! On enclosed premises or before starting the internal combustion engine, ensure that there is sufficient ventilation!
  Observe the regulations in force at the respective site!
- Welding, burning and grinding work on the machine may only be performed by a HCE dealer.
- In areas with special hazards (toxic gases, caustic vapors, toxic environments, for example), wear appropriate protective equipment (breathing filters, protective clothing)!

Hydraulic system

- Work on the hydraulic equipment of the machine must be performed only by persons having specific technical knowledge and experience in hydraulic systems!
- Check all lines, hoses and screw connections regularly for leaks and obvious damage! Repair any damage and leaks immediately! Splashed oil can cause injury and fire!
- In accordance with the Operator's Manual/instructions for the respective assembly, release the pressure in all system sections and pressure lines (hydraulic system) to be opened before performing any implementing/repair work!
- Hydraulic lines must be routed and installed properly! Ensure that no connections are interchanged. The fittings, lengths and quality of the hoses must comply with the technical requirements.
- Do not travel across flexible hydraulic lines.
- Do not remove the protective hoses (Dual Power option) from the hydraulic hoses.

Noise

- Never operate the machine without the sound baffles included in the standard equipment of the machine.
- Wear ear protectors if necessary!

Oil, grease and other chemical substances

- When handling oil, grease and other chemical substances (for example battery electrolyte – sulfuric acid), observe the product-related safety regulations (safety data sheet)!
- Be careful when handling hot consumables – burn hazard!
- When using the machine in contaminated areas, take appropriate measures for the protection of the operator and the machine.

Battery

California proposal 65

WARNING

Batteries, battery poles, terminals and corresponding accessory parts contain lead and its compounds and other chemicals that, according to the state of knowledge of the state of California, cause cancer, birth defects or reproductive harm. Wash your hands after use.

WARNING

Cancer and Reproductive Harm - www.P65Warnings.ca.gov.

- When handling the battery observe the specific safety instructions and regulations relevant to accident prevention. Batteries contain sulfuric acid – caustic!
- Especially when charging batteries, as well as during normal operation of batteries, an oxyhydrogen mixture is formed in the battery cells – explosion hazard!
- Do not attempt to jump-start the machine if the battery is frozen or if the acid level is low; the battery can burst or explode!

☞ Dispose of the battery immediately!

Safety instructions regarding internal combustion engines

California proposal 65

WARNING

The engine exhaust fumes of this product contain chemicals that, according to the state of knowledge of the state of California, cause cancer, birth defects or reproductive harm.

WARNING

Diesel engine exhaust fumes and some of its components cause, according to the state of knowledge of the state of California, cancer, birth defects or reproductive harm.

WARNING

Cancer and Reproductive Harm - www.P65Warnings.ca.gov.

- Internal combustion engines present special hazards during operation and fueling.
- Failure to follow the warnings and safety instructions can cause serious injury or death.
- Keep the area around the exhaust system free of flammable materials.
- Check the engine and fuel system for leaks (for example, loose fuel lines). Don't start or let the engine run in case of leaks.
- Breathing the exhaust fumes causes death very quickly.
- Engine exhaust fumes contain invisible and odorless gases (e.g. carbon monoxide and dioxide).
- Never operate the machine in enclosed premises or areas (for example in pits), if there is no suitable ventilation (for example exhaust-gas filters, suction systems).
- Do not operate the vehicle in potentially explosive areas.
- Do not touch the engine, exhaust system and cooling system as long as the engine is still running or has not cooled down yet.
- Do not remove the radiator cap when the engine is running or hot.
- The coolant is hot, under pressure and can cause serious burns.

Tracks

- Check track tension at regular intervals.
- Repair work on the tracks must be performed by technical personnel or by HCE dealers only!
- Malfunctioning tracks reduce the machine's operational safety. Check the tracks regularly for:
  - •Cracks, cuts or other damage
  - •Check track tension at regular intervals

2.9 Hammer operation

- Contact your HCE dealer for information on the correct equipment.

Safety instructions

- – see chapter 2.5 *General conduct and safety instructions* on page 2-4
- If there is a risk of material coming off in fragments and splinters, for example when working with a hydraulic hammer, a suitable protection, for example a shatter protection or another suitable protective facility must be installed on the machine.
- During operation, all persons must stay clear of the job site of the machine.
- Do not place the machine directly underneath the workplace during demolition, otherwise parts can fall onto the machine or the building can collapse.
- Do not perform demolition work below the machine, this could cause the machine to tip over.
- The machine can lose its balance and tip over if a hammer or other heavy attachment is used. Proceed as follows to perform work both on level ground and on slopes:
  ☞ Never turn, lower or set down the attachment abruptly.
  ☞ Do not extend or retract the boom abruptly, otherwise the machine can tip over.
- Do not use the impact force of the attachment to perform demolition work. Falling demolished parts (for example parts of buildings) can cause injury and/or damage to property and/or the machine.
- Stop vehicle operation immediately if a hydraulic hose moves back and forth in an unusual manner. This could be a cause for a defect. Contact your HCE dealer and have the error repaired immediately.

Working with a hammer

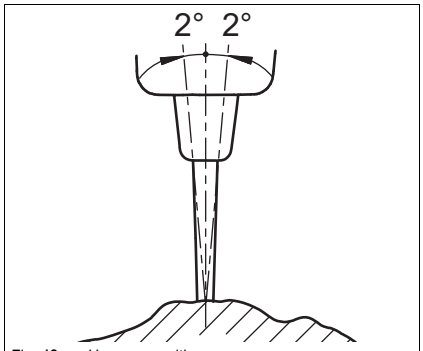

Fig. 42: Hammer position

NOTICE

Bear in mind the following for hammer operation:

•Keep the hammer perpendicular to the surface (max. deviation to all sides is 2°).

•After you have driven the hammer into the material, do not try to fragment the material with movements to the sides.

•Never move the hammer as you drive it into the material.

•Do not operate the hammer in the same spot uninterruptedly for more than 15 seconds.

•If the applied impact force does not break the material, move the hammer to the edge or start again in another place in order to break the material.

•Do not put the hammer into operation if a cylinder is fully extended or retracted.

•Never use the hammer horizontally or upward.

•Do not use the hammer for catching or collecting material.

•Press the hammer firmly against the material to avoid hammer operation without any resistance.

•Do not use the hammer to raise loads.

•Do not hit the hammer against rocks, concrete, etc.

NOTICE

Always observe the following instructions:

•Do not raise the machine with the boom.

•Do not perform any movements with the machine during hammer operation.

•Working with the cylinders and/or the boom fully extended is prohibited.

Dual Power (option)

Operating radius

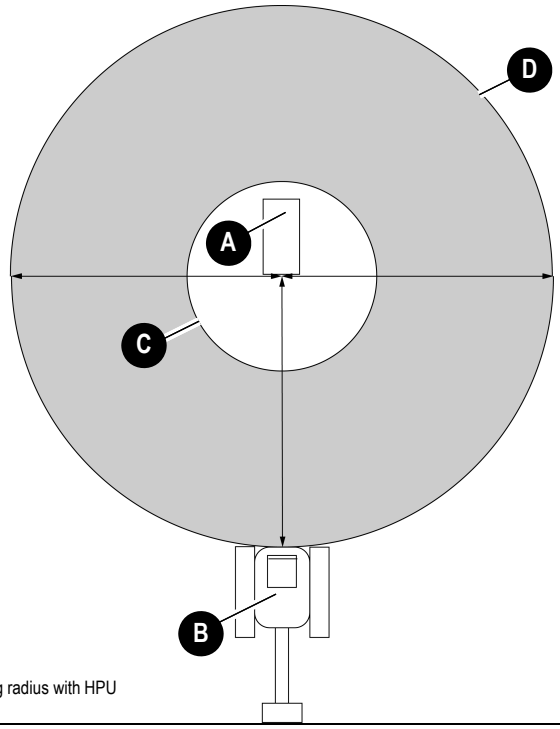

Fig. 43: Operating radius with HPU

Position	Function
A	Electro-hydraulic power unit HPU
B	Hydraulic excavator
C	Minimum operating radius with connected power unit: 1.5 m/59 in
D	Maximum operating radius with connected power unit: 10 m/33 ft
--	Minimum bending radius of Dual Power hydraulic hoses: 30 cm (12 in)

- The power unit must be at the same level as the excavator.
- Do not pull the power unit with the hydraulic hoses.
- The operator must have permanent visual contact with the power unit.
- Do not travel across hydraulic hoses.
- The protective hoses must be located on the exavator side of the hydraulic hose and must not be removed.
- Do not squeeze hydraulic hoses.
- Do not put hydraulic hoses over edges.
- Do not put anything down on the hydraulic hoses.
- Do not put the connecting cable over edges.

3 Operation

This chapter describes the controls, and contains information on the function and handling of the indicator lights and controls on the control stand.

The pages stated in the table refer to the description of the controls.
A combination of digits, or a combination of digits and letters (for example 40/**18** or 40/**A**) used to identify the control elements, means:
fig. no. 40/control element no. 18 or position **A** in fig. no. 40
Figures carry no numbers if they are placed to the left of the text.

The symbols used in the description have the following meanings:

- Identifies a list
  - Subdivision within lists or an activity. Follow the steps in the recommended order.

☞ *Identifies an activity*

➥ Description of the effects or results of an activity

3.1 Control stand overview

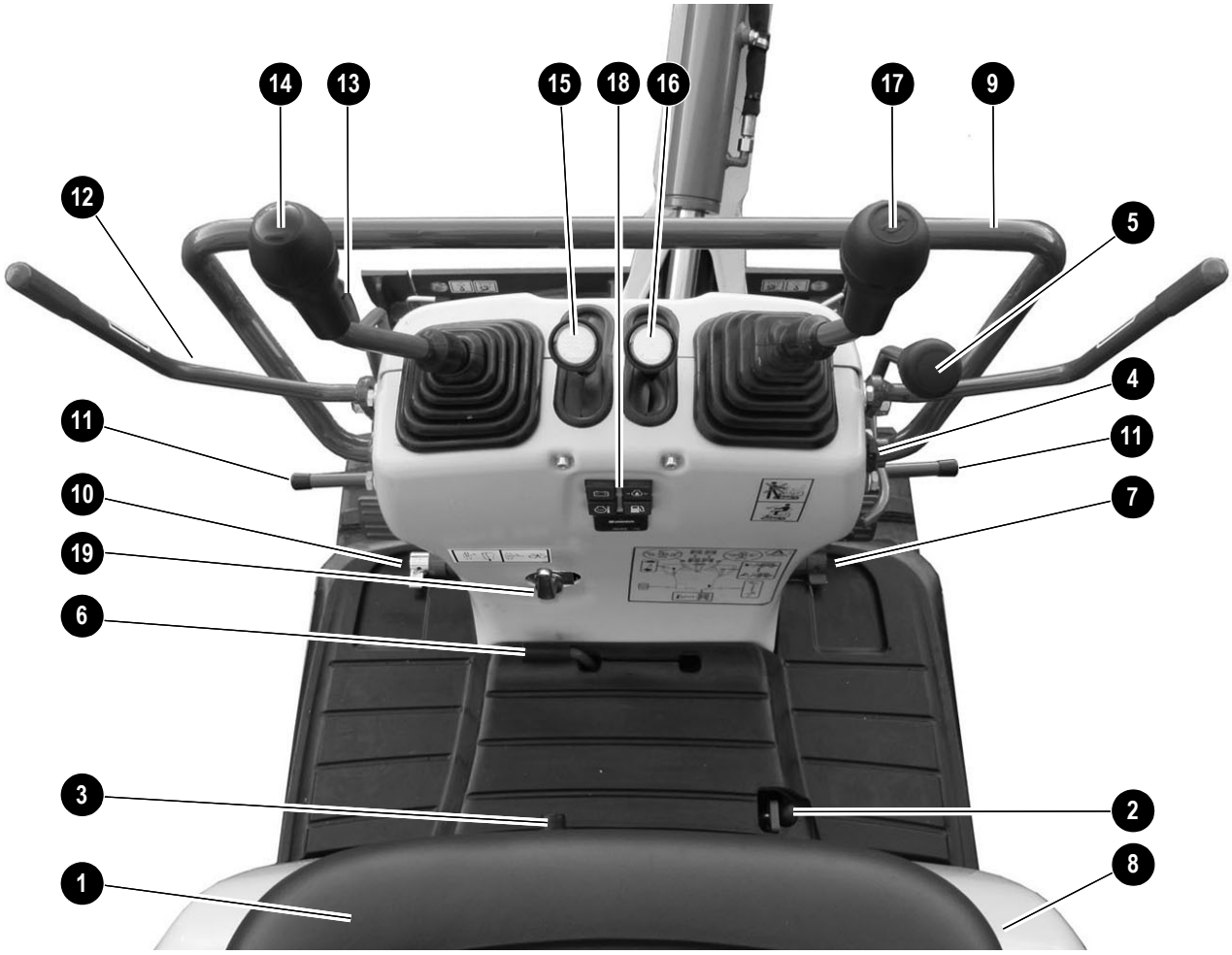

Item	Description	For more information see page
1	Operator seat	3-29
2	Upper carriage lock	3-26
3	Engine cover lock	3-42
4	Starter	3-10
5	Stabilizer blade/telescopic travel gear lever	3-23,3-25
6	Stabilizer blade/telescopic travel gear changeover lever	3-25
7	Boom swivel pedal	3-55
8	Engine cover	3-43
9	Handhold	
10	Auxiliary hydraulics pedal	3-57
11	Footrest	
12	Lock lever	3-64
13	Throttle	3-10
14	Control lever (left)	3-54
15	Drive lever (left)	3-17
16	Drive lever (right)	3-17
17	Control lever (right)	3-54
18	Display element	3-6
19	Lever for switching over hammer/grab operation (option)	3-77

3.2 Display elements (overview)

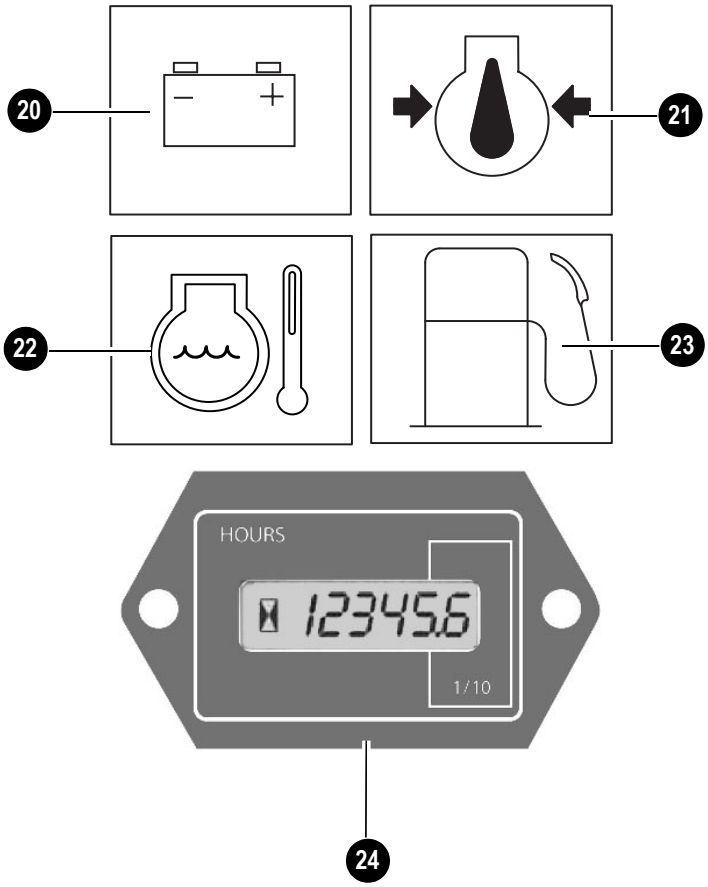

Item	Description	For more information see page
20	Alternator charge function indicator light (red)	3-11
21	Indicator light (red) – engine oil pressure	3-11
22	Indicator light (red) – coolant temperature	3-12
23	Indicator light (yellow) – fuel gage	3-12
24	Hour meter	3-12

3.3 Putting into operation

Information!

Machine operation is only allowed when seated on the seat.

Safety instructions

- Always use the climbing aids when climbing aboard the machine – see chapter 3.7 Access to the control stand on page 3-26.
- Never use the controls, lines or cables as handles.
- Never get on a moving machine. Never jump off the machine.
- Observe the lift capacity table (see chapter “Technical data – lift capacity table”).

Putting into operation for the first time

Important in formation

- The machine may only be put into operation by authorized personnel
  – see chapter 1.7 Regulations on page 1-6
  – see chapter Selection and qualification of personnel, basic responsibilities on page 2-5!
- The personnel must have read and understood this Operator’s Manual before putting the machine into operation.
- The machine may only be used in technically perfect condition in accordance with its designated use and the instructions set forth in the Operator’s Manual, and only by safety-conscious persons who are fully aware of the risks involved in operating the machine.
- Go through the “Start-up” checklist in the following chapter

Running-in period

Handle the machine carefully during its first 50 operating hours.

Observe the following recommendations during the running-in period to ensure full output and a long service life of the machine.

- Do not change engine speed abruptly!
- Avoid using the machine under heavy loads and/or at high speeds.
- Avoid abrupt acceleration, braking and changing travel direction.
- Do not run the engine at high speed for extended periods.
- Strictly observe the maintenance schedules in the appendix – see chapter 5.16 Maintenance plan (overview) on page 5-37.

Check lists

The checklists below are intended to assist you in checking and monitoring the machine before, during and after operation.

These checklists are not intended to be exhaustive; They are only intended to support the fulfillment of duty to care.

The checking and monitoring work listed below is described in greater detail in the following chapters.

If the answer to one of the following questions is NO, first rectify the cause of the fault before the machine can be put into operation.

Start-up checklist

Check the following points before putting the machine into operation:

nr.	Question	✔
1	Enough fuel in the tank? (➠ 5-2)	
2	Coolant level OK? (➠ 5-10)	
3	Water drained from the water separator? (➠ 5-5)	
4	Engine oil level OK? (➠ 5-7)	
5	Oil level in hydraulic oil reservoir OK? (➠ 5-16)	
7	V-belt condition and tension checked? (➠ 5-14)	
8	Lubrication points greased? (➠ 5-26)	
9	Tracks checked for cracks, cuts, etc.? (➠ 5-24)	
10	Light system, acoustic warning system, indicator and warning lights OK? (➠ 3-25,3-8)	
11	Are the lights and the footholds clean?	
12	Raise the lock lever (➠ 3-54)	
13	Attachment safely locked? (➠ 3-68)	
14	Engine cover safely closed and locked? (➠ 3-33)	
15	Especially after cleaning, maintenance or repair work: ➥ Rags, tools and other loose objects removed?	
16	Seating position adjusted correctly? (➠ 3-26)	
17	Seat belt fastened (only if the machine is equipped with the rollbar option, and if this rollbar is raised)? (➠ 3-31)	
18	Anyone in the danger zone of the machine?	
19	Indicator lights for engine oil pressure and alternator charge function illuminate.	
20	In case of dual-power operation: hydraulic oil levels of excavator and electro-hydraulic power unit OK?(➠ 3-59)	

Operation checklist

After starting the engine, check and observe the following points:

nr.	Question	✔
1	Indicator light for engine and coolant temperature gone out? (➠ 3-3)	
2	Indicator lights for engine oil pressure and alternator charge function gone out? (➠ 3-8)	
3	Do the drive levers and pedals work correctly? (➠ 3-14)	
4	Telescopic travel gear extended? (➠ 3-22)	

“Parking” checklist

Check and observe the following points when parking the machine:

nr.	Question	✔
1	Attachments lowered to the ground? (➠ 3-24)	
2	Stabilizer blade lowered to the ground?	
3	Safety lock lever folded up; particularly if the vehicle cannot be supervised? (➠ 3-54)	
4	Vehicle key removed; particularly if the vehicle cannot be supervised? (➠ 3-24)	
When parking on public roads:		
5	Machine appropriately secured?	
When parking on slopes:		
6	Machine also secured with chocks under the tracks to prevent it from rolling away? (➠ 3-24)	

3.4 Driving the excavator

Starter

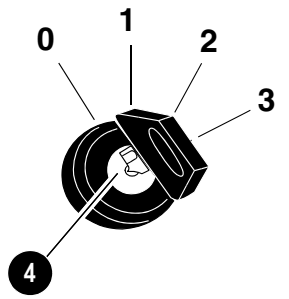

Fig. 44: Preheating start switch

Position	Function	Power consumer
0	Insert or remove the starting key	None
1	ON/machine travel position	Feed pump switched on ➥ Indicator lights illuminate
2	Preheats the engine	Glow plugs
3	Starts the engine	Starter

Throttle

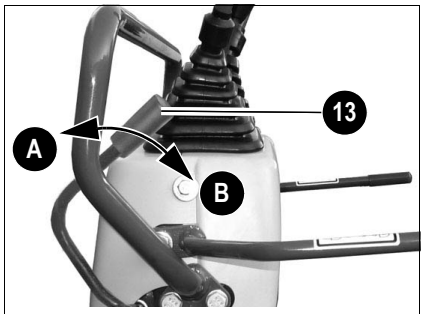

Fig. 45: Engine speed control

Speed is set continuously with throttle 13

➥ Position A: idling speed

➥ Position B: max. engine speed

Travel signal (option)

A travel signal sounds as soon as at least one of the tracks moves.

WARNING

Accident hazard during forward/backward machine travel.

Serious crushing hazard causing death or serious injury.

- Do not allow anyone to stay in the danger zone.
- Do not rely on the travel signal under any circumstances.
- If the travel signal does not sound, stop machine operation immediately and contact a HCE service center (observe the relevant national regulations).

Indicator lights and warning lights (overview)

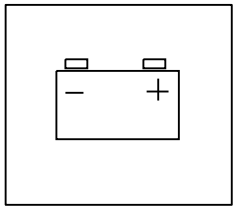

Indicator light (red) – alternator charge function

NOTICE

The coolant pump no longer runs either if the V-belt is faulty. Risk of engine overheating or breakdown!
If the indicator light illuminates with the engine running:

- Stop the engine immediately and have the cause repaired by a HCE service center

The V-belt is malfunctioning or there is an error in the charging circuit of the alternator if the indicator light illuminates with the engine running. The battery is no longer charged.

The indicator light illuminates when the starter is engaged on and goes out as soon as the engine runs.

Information!

During operation with an electro-hydraulic power unit, the indicator light illuminates if the battery has to be charged
– *see chapter Charging the excavator battery* on page 3-63.

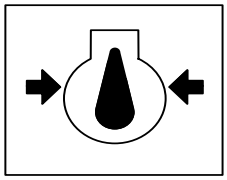

Indicator light (red) – engine oil pressure

Illuminates if the engine oil pressure is too low. In this case:

☞ *Stop the engine immediately and*

☞ *Check the oil level*

The indicator light illuminates when the starter is engaged on and goes out as soon as the engine runs.

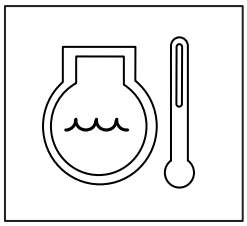

Indicator light (red) – coolant temperature

DANGER

Never open the radiator and never drain coolant if the engine is warm since the cooling system is under high pressure

–

Burn hazard!

- Wait at least 10 minutes after stopping the engine!
- Wear protective gloves and clothing
- Open the cap to the first notch and release the pressure

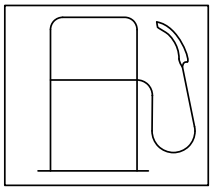

Fuel level indicator

Fill up immediately if this indicator light illuminates. Bleed the fuel system if the tank has been run empty.

Hour meter

Counts the operating hours when the engine or the electrohydraulic power unit is running if the machine is equipped with the **Dual Power** option.

Information!

The operating hours are only displayed if the starter is enabled.

Before starting the engine:

☞ Adjust seat position – see Seat adjustment on page 3-26

Information!

All controls must be within easy reach and you must be able to move them to the limit!

Information!

Operate the machine only on appropriately ventilated premises! Ensure sufficient ventilation on enclosed premises!

Information!

Machine operation with the rollbar lowered is prohibited – see chapter Operation with lowered ROPS rollbar on page 2-9.

☞ Fasten your seat belt (rollbar option only)
– see Retracting seat belt (option) on page 3-31

☞ Check whether all levers and pedals are in neutral position

☞ Move the throttle to the center position (between minimum and maximum) if the engine is cold

Starting the engine: general

- The starter cannot be actuated if the engine is already running (start repeat interlock).
- Do not run the starter for more than 10 seconds.
- Wait about 1 minute so the battery can recover before trying again.

Procedure

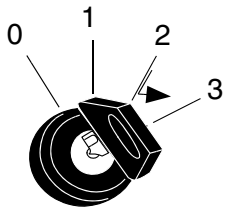

Fig. 46: Preheating start switch

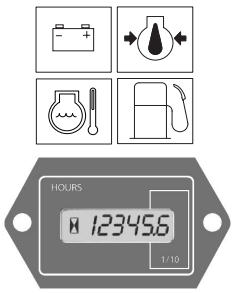

Fig. 47: Display elements

NOTICE

Actuating the preheating system too long can damage the glow elements.

- Do not pre-heat for more than 20 seconds.

After you have completed the starting preparations:

☞ Insert the starting key in the preheating start switch

☞ Turn the starting key to position 1

☞ Check whether all indicator lights are on

☞ Have malfunctioning indicator lights immediately replaced

☞ Turn the starting key to position 2 and hold it in this position for 15 seconds

➥ Engine is preheated

☞ Turn and hold the starting key in position 3 until the engine starts

➥ If the engine does not start after 10 seconds

☞ Interrupt the start procedure and try again after about 1 minute

➥ If the engine does not start after the second try

☞ Contact a HCE service center for troubleshooting.

➥ As soon as the engine runs:

☞ Release the starting key

3.5 Starting at low temperatures

Information!

In general, a battery delivers less energy in cold conditions. Therefore ensure that the battery is always well charged.

When the engine has started

☞ Check whether all indicator lights have gone out :

☞ Letting the engine warm up

At cold temperatures:

☞ Increase the engine speed slowly

☞ Apply full load to the engine only after the warm-up phase

Engine and machine warm-up

- Once it has started, let the engine warm up about 5 Minutes at slightly increased idling rpm. Actuate the operating hydraulics to warm up the hydraulic oil and the components more quickly.
- Set the engine speed lever to the center position, actuate the operating hydraulics about 5 minutes and repeatedly move the bucket cylinder to the limit for less than 10 seconds.
- Move the engine speed lever to maximum position, move all control levers through all positions so the warm oil can circulate through all hydraulic components.

At temperatures below -18 °C or if the functions still respond slowly, extend the warm-up phase accordingly.

During the warm-up phase, check for unusual noise, exhaust color, leaks, malfunctions or damage. In case of malfunctions, damage or leaks, park and secure the machine, and find out the cause for the damage and have it repaired.

Jump-starting the engine (supply battery)

Safety instructions

- Never jump-start the engine if the battery of the machine is frozen – danger of explosion!

  ☞ Dispose of a frozen battery!
- The excavator must not touch the jump-starting vehicle when connected with jump leads – sparking hazard!
- The voltage of the auxiliary power supply must be 12 V; higher supply voltage will damage the vehicles' electrical system!
- Use only authorized battery jumper cables which conform to the safety requirements and which are in perfect condition!
- The jump lead connected to the positive **+** terminal of the starting battery must never be brought into connection with electrically conductive vehicle parts ***– risk of short circuit!***
- Route the jump leads so that no one can catch on rotating components in the engine compartment!

Procedure

☞ *Drive the jump-starting vehicle close enough to the machine so that the jump leads can reach to connect the two batteries*

☞ *Let the engine of the jump-starting vehicle run*

☞ *First connect one end of the red jump lead (**+**) to the **+** terminal of the empty battery, then connect the other end to the **+** terminal of the starting battery*

☞ *Connect one end of the black jump lead (**–**) to the **–** terminal of the starting battery*

☞ *Connect the other end of the black cable (**–**) onto a solid metal component firmly screwed on the engine block or onto the engine block itself. Do not connect it to the negative terminal of the empty battery, as otherwise explosive gas emerging from the battery can ignite if sparks are formed!*

☞ *Start the engine of the machine with the empty battery*

Once the engine has started:

☞ *With the engine running, disconnect both jump leads in exactly the reverse order (first remove the **–** terminal, then the **+** terminal) – this prevents sparking in the vicinity of the battery!*

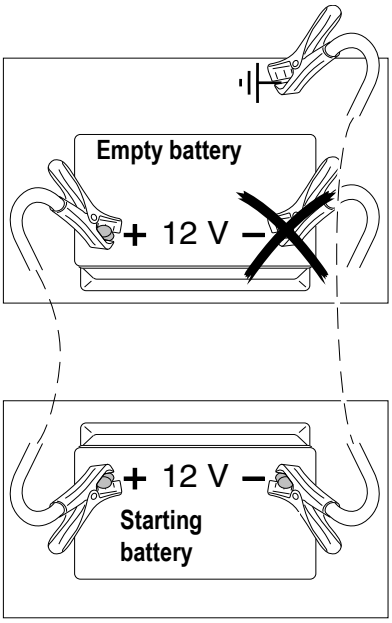

Fig. 48: Starting aid with battery jumper cables

34001b710 05 eps

Special instructions for machine travel on public roads

The machine is subject to the:

- Applicable legal regulations of your country

Also observe the applicable regulations for accident prevention of your country.

Machine travel position

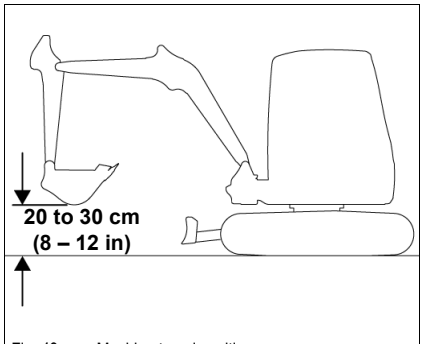

Fig. 49: Machine travel position

- Position the vehicle as shown.
- Position the boom at the center and raise it about 20 to 30 cm (8 – 12 in) off the ground.

Information!

During machine travel, raise the stabilizer blade sufficiently high off the ground to avoid ground contact on rough terrain.

Starting vehicle travel

After starting the engine:

☞ *The alternator charge indicator light goes out*

☞ *Slowly actuate the drive lever*

➥ Machine travel starts

Operating temperature range

The following operating conditions must be fulfilled in order to ensure optimal output and a long service life of the machine.

Do not operate the machine at ambient temperatures above +38 °C (+100 °F) or below −15 °C (−5 °F).

Drive levers

WARNING

Accident hazard due to incorrectly rotated upper carriage!

If rotated incorrectly, the upper carriage blocks the visibility of the travel path.

- Before starting vehicle travel on a construction site, align the upper carriage so that the operator has an unrestricted view of the travel path.

WARNING

Accident hazard! The machine moves in the opposite direction if the upper carriage is rotated by 180°!

Can cause serious injury or death.

- Slowly and carefully actuate the drive levers/pedals

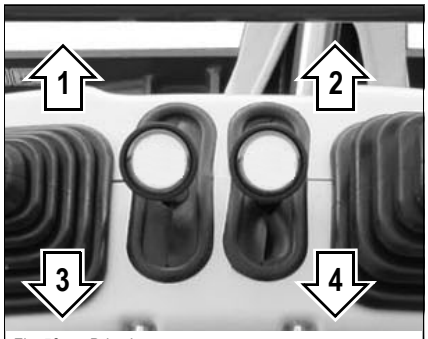

Fig. 50: Drive levers

The stabilizer blade side is the front side.

Raise the attachment and the stabilizer blade.

The travel movements of the machine are controlled with the drive levers.

Lock the upper carriage when traveling over longer distances.

Position	Lever	Function
1 2	Push forward Push forward	Track excavator moves forward
3 4	Pull backward Pull backward	Track excavator moves backward
3 2	Pull backward Push forward	Track excavator turns to the left
1 4	Push forward Pull backward	Track excavator turns to the right

Forward or reverse travel speed depends on the position of the drive levers and on the engine speed.

Information!

Ensure that both tracks move as you change direction, otherwise the rubber tracks are subject to increased abrasion.

ISO/SAE changeover (option)

WARNING

Accident hazard due to modified control lever operation!

Can cause serious injury or death.

- Change over the controls only on level and firm ground, and only if the starting key is removed.
- Ensure that you know which control mode has been selected before starting work.

The changeover is located under both covers **1** on the control stand.

Switching is possible between Operating Pattern A (ISO controls) and Operating Pattern B (SAE controls).

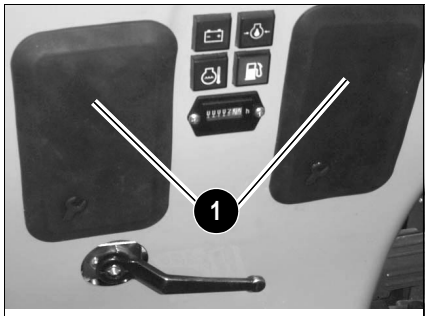

Fig. 51: Control stand covers

1 Park the machine on level and firm ground, lower the boom to the ground, stop the engine and remove the starting key.

2 Raise covers **1**.

3 Slide the knurled sleeve **2** upward, and hold, unhitch and grease it.

4 Slide the knurled sleeve **2** upward and hitch it into ball pin **A** or **B** as required. The sleeve is safely locked if it is firmly connected with the ball pin and if it is engaged in the lower position.

5 Lower covers **1**.

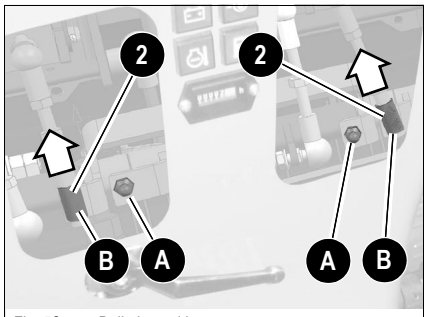

Fig. 52: Ball pin position

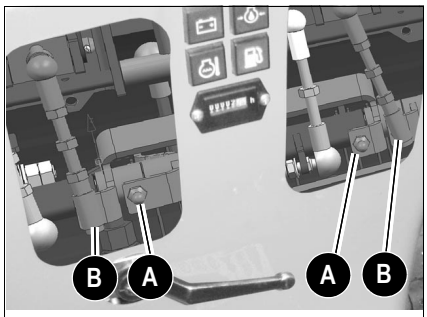

Fig. 53: ISO/SAE changeover

Wiring diagram	Controls	
A	ISO controls (Europe)	Operating Pattern A ball pin position A (inside)
B	SAE controls (US)	Operating Pattern B ball pin position B (outside)

Hydraulic brake

The drive levers automatically return to their initial positions as soon as they are released. This creates sufficient hydraulic braking effect.

During downhill machine travel, the automatic hydraulic brake valves prevent the machine from moving faster than the permissible travel speed.

Information!

Reduce travel speed with the drive levers, and not with the engine speed control of the diesel engine.

Stabilizer blade as a parking brake

The stabilizer blade is used as a parking brake. Press the stabilizer blade against the ground.

3.6 Machine travel on slopes

WARNING

Accident hazard due to tipping over or slipping of machine!

Can cause serious injury or death.

- Travel on slopes only on firm and level ground.
- Drive on slopes only with the telescopic travel gear extended (normal operation).
- Never exceed the stability limits of the machine (maximum gradient angle 15°, maximum lateral angle of inclination 10°).
- Raise the boom about 20 – 30 cm (8 – 12 in) off the ground and position it straight ahead at the center of the machine. In an emergency, lower the boom immediately to increase stability.
- Do not reverse down slopes.
- Do not turn or swivel the upper carriage and the boom when driving downhill or uphill with a full attachment.
- Performing vehicle travel diagonally on slopes is prohibited.
- Traveling on slopes is prohibited if a zero-emission power unit (HPU, for example) is raised with the stabilizer blade.

Stones and the humidity in the upper layer of the ground can drastically affect machine traction and stability.

The vehicle can slip sideways on gravel or loose, rocky soil. The stability of the vehicle can be reduced on rough terrain.

Newly filled or muddy ground can give away under the weight of the machine, or the tracks can dig into the ground and increase the angle of the machine (maximum gradient angle and maximum lateral angle of inclination).

If the engine dies as you drive on a slope, immediately put the control levers to neutral position and start the engine again.

Bear in mind the following under all circumstances when driving uphill or downhill:

- Keep the drive levers near the neutral position.
- Perform slow and smooth travel movements.
- Avoid sudden travel movements.
- Reduce the engine speed.

The vehicle can slip even on gentle slopes if it travels across grass, leaves, humid metal surfaces, frozen ground or ice.

Preparations for performing vehicle travel on slopes

Always move straight ahead when performing uphill or downhill machine travel.

When changing position, do not exceed a maximum gradient angle of 15° and a maximum lateral angle of inclination of 10°.

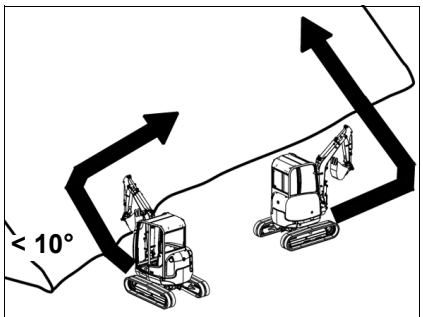

Fig. 54: Driving on slopes

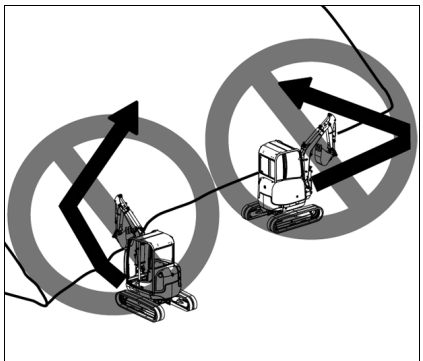

Fig. 55: Driving diagonally on slopes

Information!

Performing vehicle travel diagonally on slopes is prohibited.

Change position on level ground and then perform straight-ahead machine travel onto the slope.

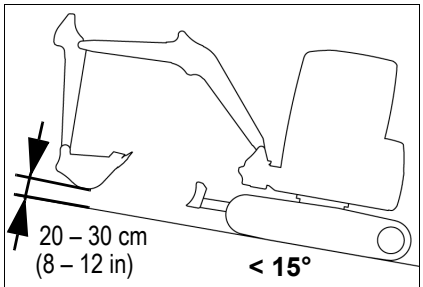

Fig. 56: Uphill vehicle operation

Uphill vehicle operation

During uphill travel, the control stand must face uphill.

Set the stabilizer blade uphill.

Raise the boom about 20 – 30 cm (8 – 12 in) off the ground and position it straight ahead at the center of the machine.

Do not exceed a maximum gradient angle of 15°.

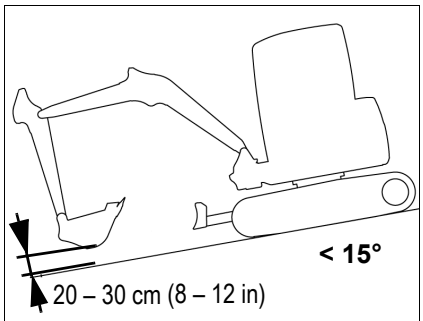

Fig. 57: Downhill vehicle operation

Downhill vehicle operation

During downhill travel, the control stand must face downhill.

Set the stabilizer blade downhill.

Raise the boom about 20 – 30 cm (8 – 12 in) off the ground and position it straight ahead at the center of the machine.

Do not exceed a maximum sloping angle of 15°.

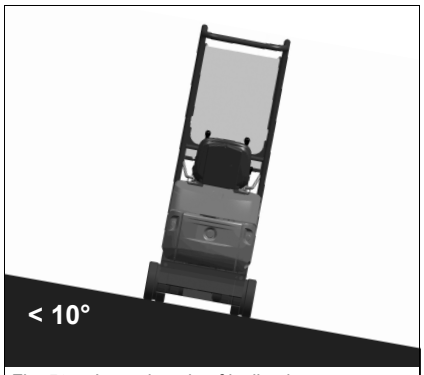

Fig. 58: Lateral angle of inclination

Lateral angle of inclination

Do not exceed a maximum lateral angle of inclination of 10°.

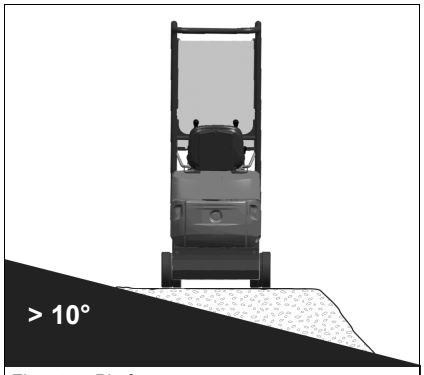

Fig. 59: Platform

On lateral inclinations over 10°, pile up material to create a level surface that can be used as a platform for the machine.

Stabilizer blade operation

WARNING

Injury hazard due to operation of stabilizer blade lever!

Can cause serious injury or death.

- Raising the lock lever does not prevent the stabilizer blade from being lowered.
- Keep out of the danger zone of the stabilizer blade.

NOTICE

Lowering the stabilizer blade too deeply into the ground can create too much resistance – *see* ***Grading*** on page 3-81.

- Slightly raise the stabilizer blade

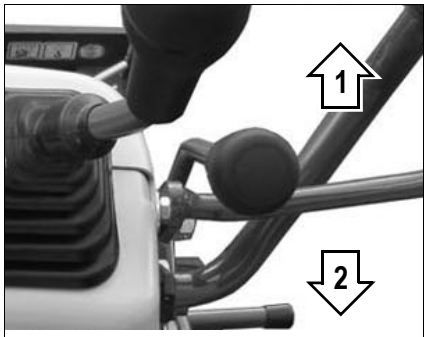

Fig. 60: Stabilizer blade operation

Position	Lever	Function
1	Push forward	Lowers the stabilizer blade
2	Pull backward	Raises the stabilizer blade

Information!

Check the position of the stabilizer blade before driving the machine.

Changing the width of the stabilizer blade

NOTICE

The machine can be damaged if the telescopic travel gear and the stabilizer blade are set to different widths (for example when driving through a door).

- Adjust the stabilizer blade and the telescopic travel gear to the same widths when operating the machine.

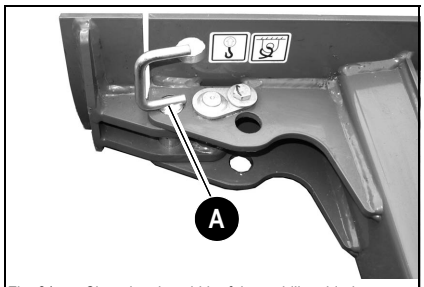

Fig. 61: Changing the width of the stabilizer blade

Reducing the width of the stabilizer blade

☞ *Raise the stabilizer blade to about 1 – 2 cm (about 0.4 – 0.8 in).*

☞ *Pull out pins* **A** *on either side.*

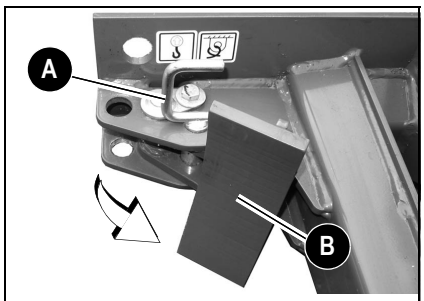

Fig. 62: Changing the width of the stabilizer blade

☞ *Turn in the stabilizer blade extensions* **B** *on either side.*

☞ *Insert pins* **A** *on either side.*

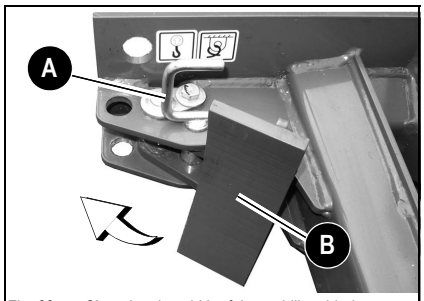

Fig. 63: Changing the width of the stabilizer blade

Increasing the width of the stabilizer blade

☞ *Raise the stabilizer blade to about 1 – 2 cm (about 0.4 – 0.8 in).*

☞ *Pull out pins* **A** *on either side.*

☞ *Turn out the stabilizer blade extensions* **B** *on either side.*

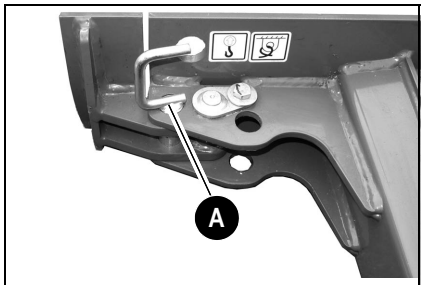

Fig. 64: Changing the width of the stabilizer blade

Insert pins **A** *on either side.*

Telescopic travel gear

WARNING

Injury hazard due to tipping over of machine!

Can cause serious injury or death.

- Only perform work with an extended telescopic travel gear.
- Traveling with a retracted telescopic travel gear is only allowed for traveling very short distances through passages.
  Pay attention to the reduced stability.
- Retract or extend the telescopic travel gear completely.
- Position the boom upward during uphill travel.
- Position the boom downward during downhill travel.
- Raise the boom about 20 – 30 cm (8 – 12 in) off the ground and position it straight ahead at the center of the machine. In an emergency, lower the boom immediately to increase stability.
  This prevents the machine from tipping over in case of a hose rupture on the telescopic cylinder. A hose rupture might cause the travel gear to retract and reduce stability.

WARNING

Crushing hazard when retracting the telescopic travel gear!

Can cause serious injury or death.

- Do not allow anyone to stay in the danger zone.

NOTICE

In order to avoid damage to the machine when traveling through doors, etc.:

- Pay attention to the width of the stabilizer blade and of the telescopic travel gear when performing machine travel through passages.
- Adjust the stabilizer blade and the telescopic travel gear to the same widths when operating the machine.

Information!

In order to achieve the best possible stability, lower the stabilizer blade, turn out the extensions (option) and extend the telescopic travel gear.

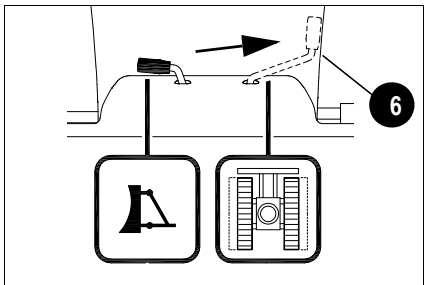

Fig. 65: Telescopic travel gear

☞ *Move lever* **6** *to the final right-hand position*

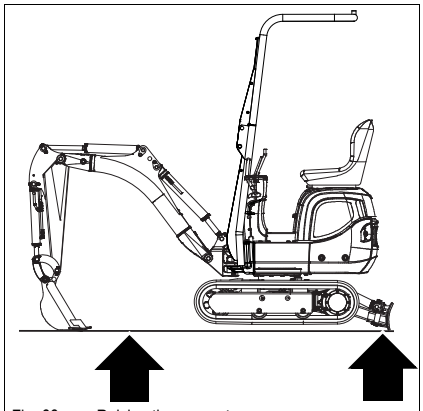

Fig. 66: Raising the excavator

☞ *Raise the machine evenly and horizontally by means of the boom and the stabilizer blade*

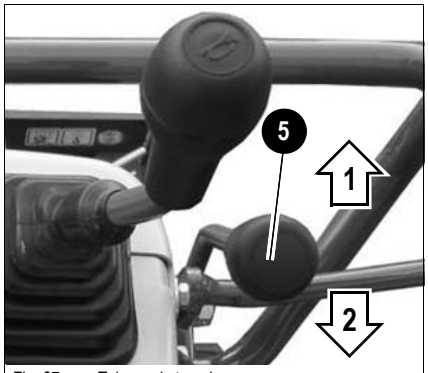

Fig. 67: Telescopic travel gear

☞ *The telescopic travel gear is controlled via control lever* **5***:*

Position	Lever	Function
1	Push forward	The travel gear is extended (wide track)
2	Pull backward	The travel gear is retracted (narrow track)

Information!

Push or pull lever **5** until the travel gear has reached its final position.

Upper carriage lock

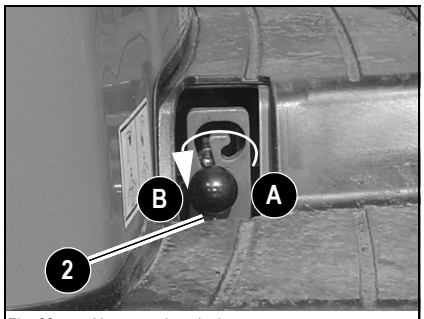

Fig. 68: Upper carriage lock

WARNING

Accident hazard due to incorrect transportation!

Can cause serious injury or death.

- Lock the upper carriage.
- Secure the machine and the implements correctly.

The upper carriage lock prevents the upper carriage from rotating when driving the machine over longer distances, or locks the upper carriage during transport.

Locking the upper carriage

☞ *Pull lever* **2** *from position* ***A*** *to position* ***B***

Unlocking the upper carriage

☞ *Push lever* **2** *from position* ***B*** *to position* ***A***

Parking the machine

WARNING

Accident hazard due to incorrect parking!

Can cause serious injury or death.

- Park the machine on level ground
- Press the boom and the stabilizer blade against the ground
- Secure the tracks accordingly (for example chocks)

☞ *Stop the vehicle.*

☞ *Press the boom and the stabilizer blade against the ground.*

☞ *Reduce engine speed completely.*

NOTICE

Never stop the engine under full load, otherwise it can be damaged due to overheating. Except in case of an emergency, always ensure that the engine can cool down before it is stopped.

- Let the engine run at idling speed with no load for at least 5 minutes before you switch it off.

☞ *Secure the machine against unauthorized operation.*

☞ *Raise the lock lever.*

☞ *Remove the starting key and carry it with you.*

Parking the machine on slopes

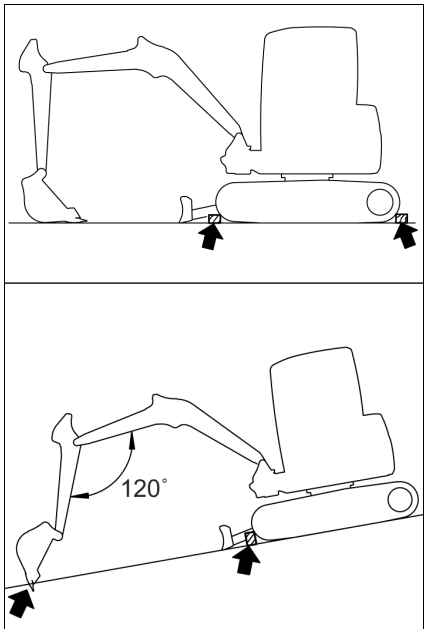

Fig. 69: Parking the machine on slopes

☞ *Avoid stopping the machine abruptly. Always ensure that there is enough space for stopping the machine.*

- Park the vehicle on firm, level, and horizontal ground. Never park on slopes. If you cannot avoid parking the machine on a slope:
  - ☞ Press the bucket onto the ground on the downhill side of the machine.
  - ☞ Place the stabilizer blade downhill and press it against the ground.
  - ☞ Place chocks under the tracks to prevent the machine from moving.

WARNING

Accident hazard due to control lever operation!

Can cause serious injury or death.

- Raise the lock lever before leaving the seat.

Light system

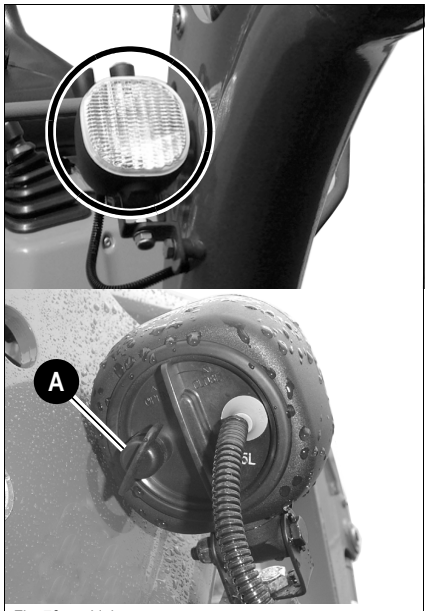

Fig. 70: Light system

The working light is located on the right on the boom.

The working light can be switched on with switch **A** as soon as the starting key is in position “1”.

The switch has several positions and can be turned.

Therefore continue turning switch **A** by one notch to switch the working light on or off.

Information!

The Dual Power option includes a power-saving LED light – *see chapter* ***LED working light*** on page 3-65

Power outlet

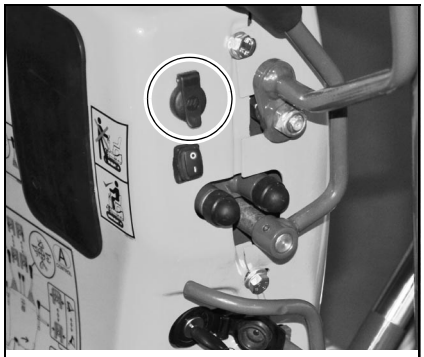

Fig. 71: 12 V power outlet

The control stand is equipped with a 12 V outlet on the right. This makes it possible to operate a 12 V rotating beacon, for example.

NOTICE

There must be no consumer connected to the 12 V outlet during Dual-Power operation.

- The 12 V outlet may only be used during diesel operation, since the battery is not charged during Dual-Power operation
  – *see chapter* ***Charging the excavator battery*** on page 3-63.

Seat adjustment

WARNING

Accident hazard when adjusting the operator seat during machine operation!

Can cause serious injury or death.

- Adjust the correct seating position.
- Do not adjust the operator seat during operation.

Fig. 72: Seat adjustment

Horizontal adjustment:

☞ Sit down on the operator seat.

☞ The operator must touch the backrest with his back.

☞ Pull lever H upward and at the same time

☞ Move the seat forward or backward

3.7 Access to the control stand

WARNING

Injury hazard when entering or exiting!

Can cause serious injury or death.

- Bear in mind the following before accessing the control stand:
  - The footholds and handles must be free of snow, ice, oil, grease, mud or other dirt.
  - Stop the machine on firm, level and horizontal ground – *see chapter* ***Parking the machine*** on page 3-24
  - Lower the boom
  - Stop the engine
  - Raise the lock lever
  - Remove the starting key

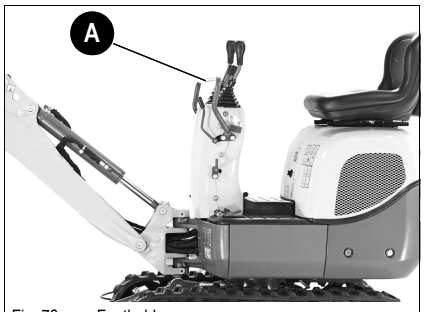

Fig. 73: Footholds

☞ *Use handhold **A**.*

Fig. 74: ROPS handles

☞ *Use handhold **A**.*

Telescopically extended travel gear

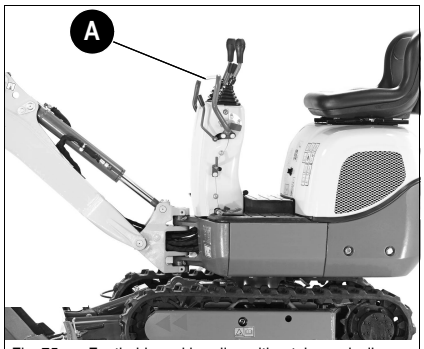

Fig. 75: Footholds and handles with a telescopically extended travel gear

☞ *Use handhold **A**.*

3.8 Lowerable ROPS rollbar

WARNING

Accident hazard during machine operation with a lowered rollbar.

Can cause serious injury or death.

- Machine operation is only allowed if the rollbar is raised and locked, and if the seat belt is fastened.
- Depending on the situation, traveling over very short distances with a lowered rollbar is allowed (in case of low clearance heights, for example) – *see chapter* ***Operation with lowered ROPS rollbar*** on page 2-9.

WARNING

Injury hazard due to unfastened seat belt!

Can cause serious injury or death.

- Use the seat belt only if the rollbar is raised!

WARNING

Injury hazard due to damaged rollbar!

Can cause serious injury or death.

- Machine operation with a damaged rollbar is prohibited. Contact a HCE service center.

NOTICE

The boom must not be moved if the rollbar is lowered!

Lowering the rollbar

Information!

Remove the window if the machine is equipped with the shatter protection option – see chapter 3.9 Shatter protection (option) on page 3-41.

☞ Stop the machine on firm, level and horizontal ground
☞ Fully raise the boom
☞ Pull the stick toward the machine
☞ Tilt in the bucket
☞ Position the boom straight ahead
☞ Stop the engine
☞ Raise the lock lever

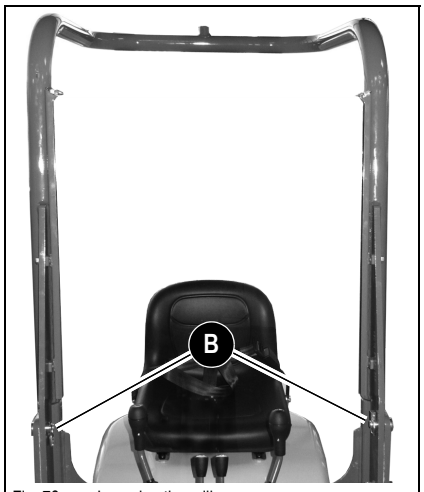

Fig. 76: Lowering the rollbar

☞ *Remove the starting key*

Information!

In order to lower it, the rollbar must be held by one person on either side.

☞ *Remove the linch pins and bolts* **B** *on either side*

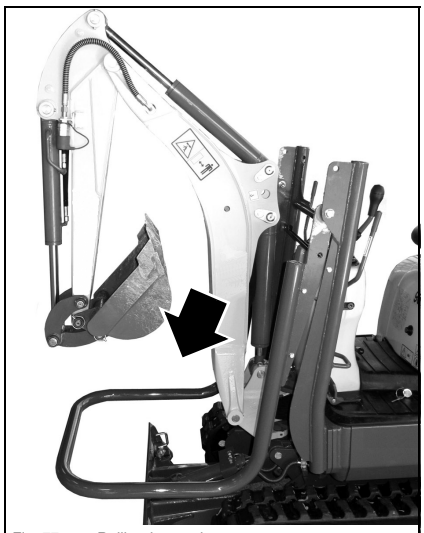
Fig. 77: Rollbar lowered

☞ *Slowly and carefully lower the rollbar as far as it will go*

Raising the rollbar

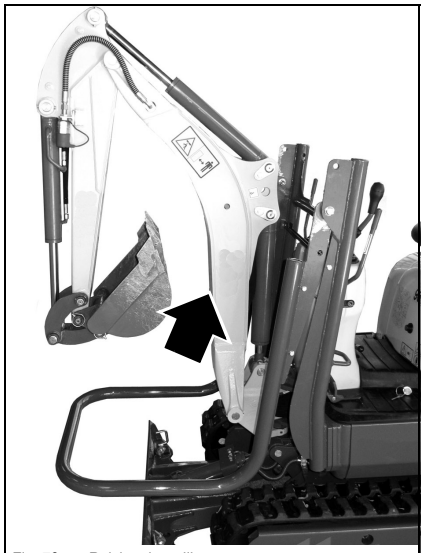
Fig. 78: Raising the rollbar

☞ *Stop the machine on firm, level and horizontal ground*

☞ *Stop the engine*

☞ *Raise the lock lever*

☞ *Remove the starting key*

Information!

In order to raise it, the rollbar must be held by one person on either side.

☞ *Slowly and carefully lower the rollbar*

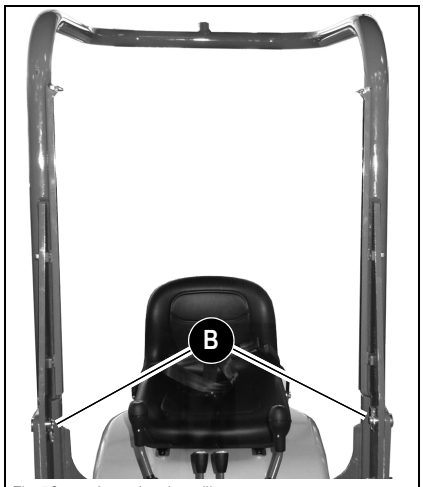

Fig. 79: Lowering the rollbar

☞ Install the linch pins and bolts B on either side

Fig. 80: Rotating beacon bracket

Rotating beacon bracket

Bracket P for installing a rotating beacon is located on top of the rollbar.

Retracting seat belt

WARNING

Injury hazard during machine operation without fastening the seat belt!

Can cause serious injury or death.

- Operating the machine without fastening the seat belt is prohibited under all circumstances.
- Seat belt must not be twisted.
- The seat belt must run over the hips – and not over the stomach.
- Do not place the seat belt over hard, edged or fragile items (tools, rulers, glasses, pen) carried inside your clothes.
- Never buckle up 2 persons with one seat belt.
- Check the seat belt condition regularly. Have damaged parts immediately replaced by a HCE service center.
- Always keep the seat belt clean, as coarse dirt can impair proper functioning.
- Seat belt buckle must not be obstructed by foreign bodies, otherwise the buckle latch cannot lock into place.
- Depending on the situation, traveling over very short distances with a lowered rollbar is allowed (in case of low clearance heights, for example) – see chapter Operation with lowered ROPS rollbar on page 2-9.

After an accident the belt strap is stretched and no longer serviceable. In an accident, the seat belt does not provide enough safety!

- Replace the seat belt after an accident.
- Have fastening points and seat fixture checked for bearing capacity.

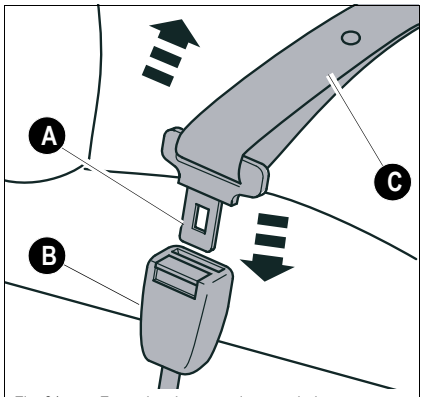

Fig. 81: Fastening the retracting seat belt

The retracting seat belt C is for the operator's safety.

Fastening the retracting seat belt:

☞Fasten the retracting seat belt as follows before starting the machine:

- Hold the belt at buckle latch A and run it slowly and steadily over the hips to buckle B
- Insert buckle latch A into buckle B until it engages audibly (pull test)

  ➥The retracting seat belt must be tightly in place over the hips!

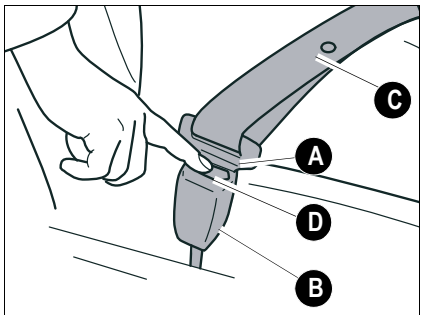

Fig. 82: Unfastening the retracting seat belt

Unfastening the retracting seat belt:

☞Unfasten retracting seat belt C as follows:

- Hold the retracting seat belt
- Press button D on buckle B

  ➥Latch A is released by spring pressure
- Unfastening the retracting seat belt

Engine cover

WARNING

Injury hazard due to rotating parts!

Can cause serious injury or death.

- Open the engine cover only at engine standstill!
- Ensure that no one is injured by the open engine cover.
- Raise the lock lever
- Remove the starting key

WARNING

Burn hazard due to hot engine parts!

Can cause serious injury or death.

- Stop the engine before performing work in the engine compartment!
- Raise the lock lever
- Remove the starting key
- Let the engine cool down.

Information!

Close and lock the engine cover after finishing work in the engine compartment.

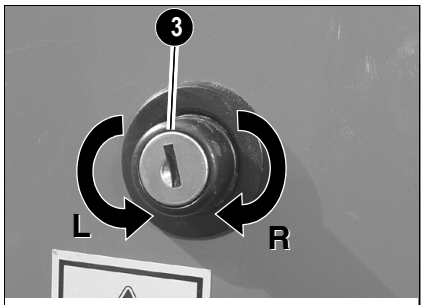

Fig. 83: Engine cover lock

Opening:

☞ *Press lock* **3**

☞ *Pull the engine cover upward*

Closing:

☞ *Firmly press down the engine cover until lock* **3** *engages with an audible click*

Locking and unlocking:

Close the engine cover with the starting key of the preheating start switch.

☞ *Turn the starting key in lock* **3** *to the* ***left*** *(**L**)*

➥ Engine cover locked

☞ *Turn the starting key in lock* **3** *to the* ***right*** *(**R**)*

➥ Engine cover unlocked

Opening the engine cover

☞ Unlock and open the engine cover.

Fig. 84: Open engine cover

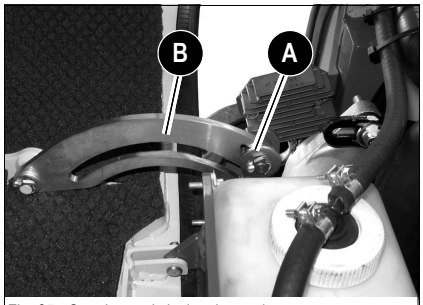

Fig. 85: Opening and closing the engine cover

☞ Let the engine cover engage in position A.

- It is locked by letting curved rail B engage in position A.

Closing the engine cover

☞ Unlock the engine cover.

- It is unlocked by raising curved rail B.

☞ Lower the engine cover slowly.

☞ Ensure that the engine cover closes correctly.

☞ Close the engine cover.

☞ Lock the engine cover.

Battery master switch

WARNING

Danger of accident from interrupted electric power supply in the HPU operation!

Can cause serious injury or death.

- The HPU operation with interrupted electric power supply is forbidden, since safety-related functions (e.g. light, horn) do not work.

NOTICE

Possible damage to the electronics due to improper actuation of the battery master switch.

- Do not operate the battery master switch with a running engine.
- Operate the battery master switch no sooner than two minutes after shutting down the engine.

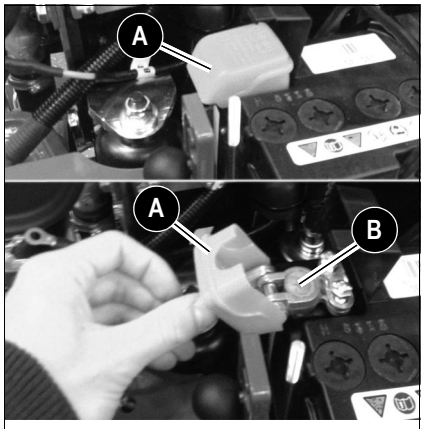

Fig. 86: Battery master switch

The vehicle has a battery isolator switch.

The battery isolator switch is located under the engine hood.

Interrupt the electric power supply:

Flip up the battery isolator switch**A** and remove from the**B** positive terminal.

Establish the electric power supply:

Set the battery isolator switch**A** to the positive terminal**B** and fold down.

Towing the machine

WARNING

Accident hazard due to towing!

Can cause serious injury or death.

- The machine may only be towed using suitable towing equipment (towing bar or cable) in connection with suitable towing facilities, such as a towing coupling, hooks and eyes.
- Start machine travel and tow away slowly.
- Ensure that no one is between the vehicles during towing.
- Have a recovery service or a HCE service center tow the machine away if necessary – *see chapter* ***Transportation*** on page 2-10.
- Ensure that no one is near the towing bar or cable. The lateral safety distance is equal to 1.5 times the length of the towing equipment.

NOTICE

Only tow the machine if absolutely necessary.

- Tow away the machine only if the engine is running and if the drive is functional. A malfunctioning machine must be loaded with a crane.
- If necessary, contact a HCE service center for towing the machine away.
- Fasten the towing equipment only on the towing eye provided for this.
- The maximum permissible load of the towing eye is equal to 1.5 times the dead weight of the machine.
- A tractor vehicle of the same weight category must be used as a minimum. In addition, the tractor vehicle must be equipped with a safe braking system and sufficient tractive power.

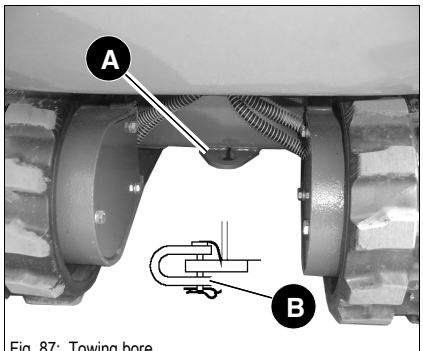

Fig. 87: Towing bore

1 Ensure that the vehicle can be towed safely.
2 Use towing eye **A** of the machine for towing.
3 Use towing eye **A** only for towing.
4 Secure shackle **B** with the shackle pin and a lock pin.
5 Install towing equipment of appropriate size on the shackle.
6 Start machine travel and tow away slowly.
7 Tow away the machine only until it can travel on its own.

Information!

The manufacturer's warranty shall not apply to accidents or damage caused by towing the machine. Using towing eye A to pull other machines or to tow equipment is prohibited.

Crane-lifting the machine

WARNING

Accident hazard due to incorrect loading!

Can cause serious injury or death.

- Ensure that no one is near the machine!
- Have loads fastened and crane operators guided by experienced persons only! The person guiding the crane operator must be within sight or sound of him.
- Ensure that the crane and the lifting gear (cables, chains) have sufficient lifting capacity!
- Raise the machine only if the standard bucket is empty.
- Stay clear of suspended loads!
- Secure the machine against unintentional movement!
- It is essential that you read the safety instructions at the beginning of this chapter and follow any other safety instructions relevant in your country!
- Lock the upper carriage – *see chapter* ***Upper carriage lock*** on page 3-23!
- Ensure that the lifting gear has the required lengths **L1** and **L2**.

NOTICE

In order to avoid damage to the machine and the lifting gear:

- Lower the rollbar during crane lifting
  – see Lowering the rollbar on page 3-28.
- Remove the window if the machine is equipped with the shatter protection option
  – see Shatter protection (option) on page 3-41.

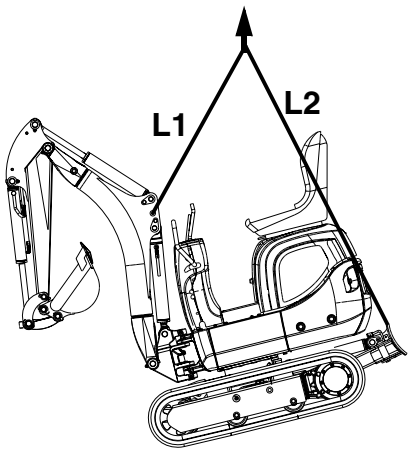

Fig. 88: Crane lifting (without rollbar)

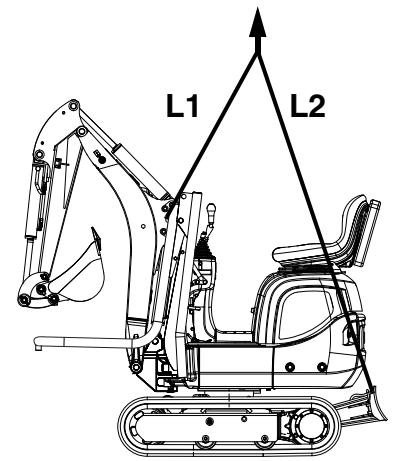

Fig. 89: Crane lifting (with rollbar)

1 Fit an empty standard bucket and lock it safely.
2 Empty the standard bucket or remove the attachment.
3 Remove all dirt from the vehicle.
4 Park the vehicle on firm, level, and horizontal ground.
5 Tilt in the standard bucket and lower it to transport position.
6 Fully raise the boom.
7 Pull the stick toward the vehicle.
8 Raise the stabilizer blade (it must be at the rear).
9 Position the boom straight ahead at the center of the vehicle.
10 Stop the engine.
11 Operate the control lever repeatedly to release the pressure in the hydraulic system.
12 Raise the lock lever.
13 Remove the starting key and carry it with you.
14 Remove all loose objects from the machine.
15 Get off the machine, close and lock all covers.
16 Remove the window if the machine is equipped with the shatter protection option. Lower the rollbar if the machine is equipped with this option.
17 Install suitable slings at the points provided for lifting the machine.
18 Install the lifting gear at the point on the boom provided for lifting the machine.
19 Install the lifting gear at the points on the stabilizer blade provided for lifting the machine.

☞ Ensure that the lifting gear has the required lengths L1 and L2.

20 Slowly raise the machine until there is no more contact with the ground.
21 Wait until the machine does not swing any more and is completely steady.
22 If the balance, and the condition and position of the slings are correct, slowly raise the machine to the required height and load it.
23 Raise the rollbar after loading the machine.

Required lengths L1 and L2 of the lifting gear:

Length	Dimension
L1	1054 mm (42 in)
L2	1718 mm (68 in)

Loading and transporting the machine

Safety instructions

- The transport vehicle must be of adequate size – refer to *Chapter* ***6 "Technical data"*** for the machine's dimensions and weights!
- Remove dirt (mud, snow, ice, for example) from the tracks so that the machine can be safely driven onto the ramps.

WARNING

Accident hazard due to incorrect loading or transportation!

Can cause serious injury or death.

- It is essential that you read the safety instructions at the beginning of this chapter and follow any other safety instructions relevant in your country!

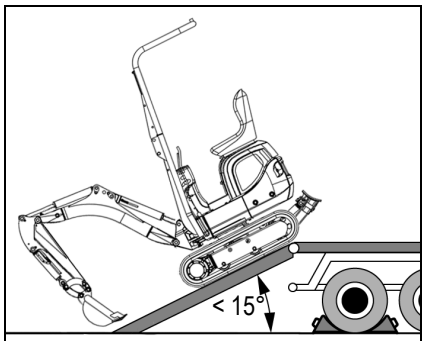

Fig. 90: Access ramps

- Secure the transport vehicle with chocks to prevent it from rolling.
- Check the safe position of the split pins on the left and right.
  – see chapter Installing on page 3-42
  If an additional cross brace is installed, the shatter protection does not have to be removed before transporting the machine on an open platform.
- Place the access ramps at the smallest possible angle. Ensure that the grade does not exceed 15° (17 %). Use access ramps with an anti-skid surface only.
- Ensure that the loading area is clear and access to it is not obstructed – for example by superstructures
- Ensure that the access ramps and the tracks of the excavator are free of dirt (oil, grease, ice, for example)
- Start the engine of the excavator
- Raise the boom enough so that it will not touch the access ramps
- Rotate the upper carriage to the rear (see figure 90)
- Carefully drive the excavator onto the middle of the transport vehicle
- Move the excavator to transport position
- Stop the engine
- Raise the lock lever
- Remove the starting key
- Close and lock the engine cover

Information!

The manufacturer's warranty shall not apply to accidents or damage caused by loading or transporting.

- Secure the machine against unintentional movement!
  – *see chapter* ***Parking the machine*** on page 3-24

Tying down the machine

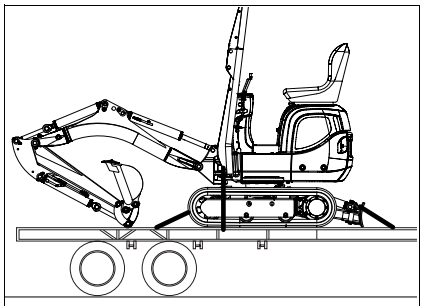

Fig. 91: Tying down the excavator

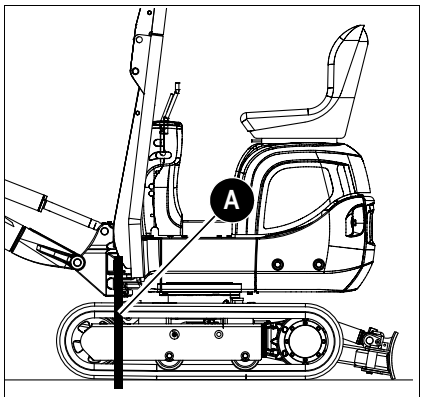

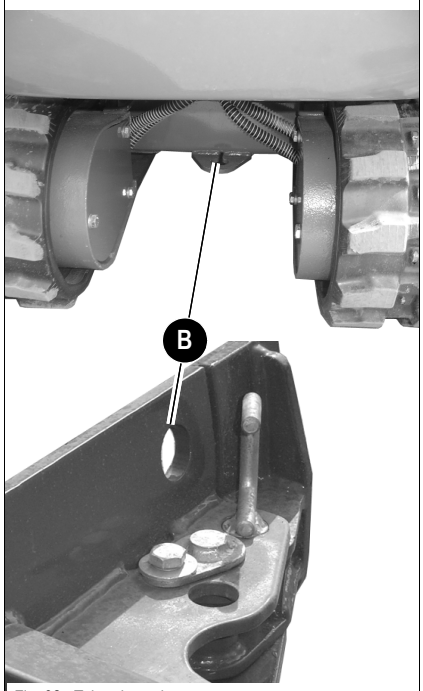

Fig. 92: Tying down the excavator

WARNING

Accident hazard due to incorrect loading or transportation!

Can cause serious injury or death.

- It is essential that you read the safety instructions at the beginning of this chapter and follow any other safety instructions relevant in your country!

- Ensure that the authorized maximum height is not exceeded
- Lock the upper carriage – *see chapter* ***Upper carriage lock*** on page 3-23
- Lower the stabilizer blade and the boom
- Firmly tie down the excavator at the swiveling console onto the platform, with belts or chains **A** of adequate size
- Firmly tie down the excavator at the eye hooks **B** onto the platform, with belts or chains of appropriate size
- Ensure that the driver of the transport vehicle knows the overall height, width and weight of his vehicle (incl. excavator) before departure, as well as the legal transport regulations of the country or countries where transport is to take place!

Information!

Use edge protectors to avoid damage both to the machine and to the belts, ropes or chains.

3.9 Shatter protection (option)

DANGER

Danger of piercing/penetration by objects from the front!

Causes serious injury or death.

- A shatter protection must be installed on a canopy version if an attachment (for example a hammer) causes fragments to fly around. This shatter protection takes over the function of a front window.
- Note restricted work area (see Fig. 94).
- Machine operation is prohibited without a shatter protection.

.

DANGER

Accident hazard in conditions of restricted visibility due to rain, snowfall, dust, etc.!

Causes serious injury or death.

- Stop machine operation immediately.

Information!

The shatter protection protects the operator against fragments from the front.

- The vehicle owner must ensure that the hazard situation is evaluated and that the national regulations are observed.
- The vehicle owner must ensure that only work is performed that does not require any higher protection.
- Accidents cannot be fully avoided despite equipping a vehicle with protective structures.

Information!

Do not use brushes, steel wool or other abrasive cleaners for cleaning the polycarbonate disk. Do not wipe dust in a dry state.

Information!

Protective structures may only be installed or removed by a HCE ser-vice center.

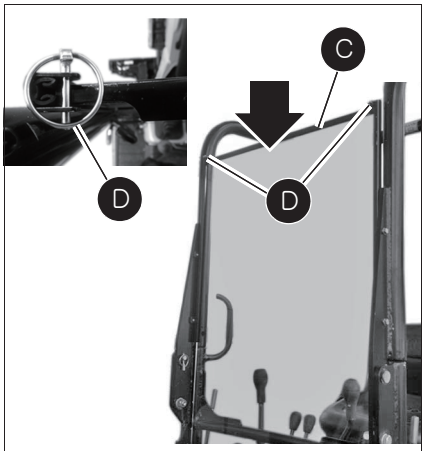

Fig. 93: Installing the shatter protection

Installing

Perform steps 1 – 6 as described above.

☞ Secure the shatter protection with cross brace C and one split pin D on the left and right.

Removing

Remove in the reverse order.

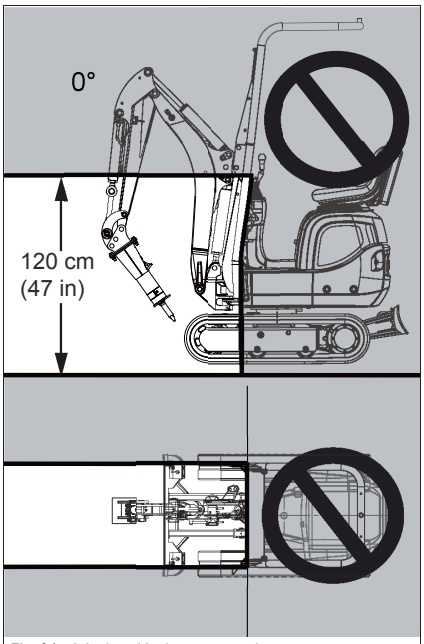

Fig. 94: Job site with shatter protection

Job site

Height of job site: 120 cm (47 in).

The figures refer to work with a HCE hydraulic hammer.

Information!

Working with another attachment can modify the height of the job site.

3.10 Machine operation

General safety instructions

- Machine operation is only allowed when seated on the seat
  – see chapter 2.6 Safety instructions regarding operation on page 2-6.
- Do not use the machine in areas with danger of falling objects!
- Never drive up to the edge of a pit from outside – risk of cave-in!
- Never undermine the foundations of walls – danger of collapse!
- Do not dig under projecting ground. Stones or the projecting earth can fall onto the machine.
- Do not excavate deeply under the front side of the machine. The ground under the machine could collapse and cause it to tip over.
- In order to leave the control stand more easily under especially difficult circumstances, position the tracks parallel to the roadside or to the uphill slope with the drive pinion behind the operator.
- Do not perform demolition work below the machine, this could cause the machine to tip over.
- If you are working on the roof of a building or other covers, the strength and the structure must be checked before commencing work; The building can collapse, which would cause serious injury/death and severe damage.
- Do not place the machine directly underneath the workplace during demolition, otherwise demolished parts can fall onto the machine or the building can collapse, causing serious/fatal injury and serious damage.
- Do not use the impact force of the attachment to perform demolition work. Falling demolished parts (for example parts of buildings) can cause injury and/or damage to property and/or the machine.
- In general the machine is more liable to tip over if the boom is positioned laterally than if it is positioned parallel to the longitudinal axis of the machine.
- The machine can lose its balance and tip over if a demolition hammer or other heavy attachment is used. Proceed as follows to perform work both on level ground and on slopes:
  ☞ Never lower, turn or set down the attachment abruptly.
  ☞ Do not extend or retract the boom abruptly, otherwise the machine can tip over.
- Do not raise the bucket over the heads of persons, the seat or the cabs of trucks or other means of transport. Material can fall out, or the bucket can knock against the truck and cause serious/fatal injury and serious damage.

- Operation of the machine by unauthorized personnel is prohibited!
- Look out for high-voltage cables, underground cables, gas and water pipes during excavation work!
- The hydraulic system of the machine is still pressurized even when the engine is not running! Release the pressure in the sections of the system and hydraulic lines that are to be opened before starting setup or repair work, for example fitting/removing an attachment with hydraulic functions – see Emergency lowering on page 3-52.
- Machine operation is only allowed if the rollbar is raised and locked, and if the seat belt is fastened.
  - Machine operation with the rollbar lowered is prohibited.
- Use an external light source in case of poor illumination of the job site. If this is not enough to illuminate the job site sufficiently, stop machine operation and start it again when sufficient illumination can be ensured.

3.11 Control lever overview

Information!

Moving a control lever quickly causes the corresponding function to be performed quickly. Moving a control lever slowly causes the corresponding function to be performed slowly.

Control lever on the left

WARNING

Accident hazard due to boom operation!

Can cause serious injury or death.

- Raise the lock lever

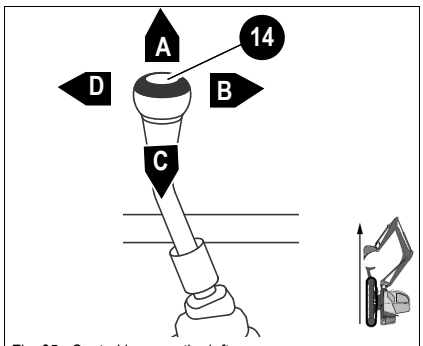

Fig. 95: Control lever on the left

Position	Lever	Function
A	☞ *Forward*	➥ Stick is extended
B	☞ *To the right*	➥ Upper carriage rotates to the right
C	☞ *Backward*	➥ Stick is retracted
D	☞ *To the left*	➥ Upper carriage rotates to the left

Information!

Always perform smooth control movements.

Control lever on the right

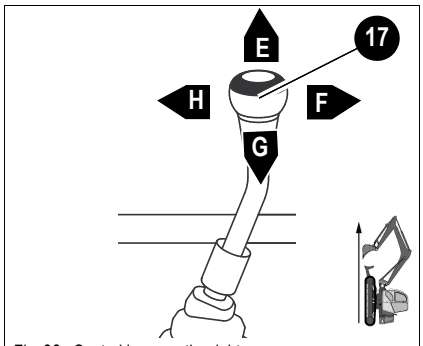

Fig. 96: Control lever on the right

Position	Lever	Function
E	☞ *Forward*	➥ Lowers the boom
F	☞ *To the right*	➥ Tilt out the bucket
G	☞ *Backward*	➥ Raises the boom
H	☞ *To the left*	➥ Tilt in the bucket

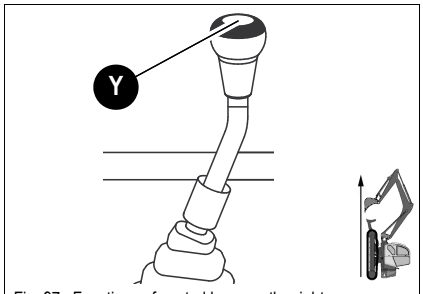

Fig. 97: Functions of control lever on the right

Button	Function
Y	➥ Horn

3.12 Boom swivel controls

WARNING

Injury hazard when operating the boom swivel mechanism!

Can cause serious injury or death.

- The boom swivel function cannot be locked either by raising the lock lever, or by raising the pedal.
- Press the pedal carefully, otherwise the boom is actuated earlier than required.
- In order to minimize the risk of unintentional operation, flip the pedal forward after swiveling the boom.

Boom swivel controls

WARNING

Injury hazard when operating the boom swivel mechanism!

Can cause serious injury or death.

- The pedal is secured with a torsion spring. The pedal flips forward when it is released, but is not locked.

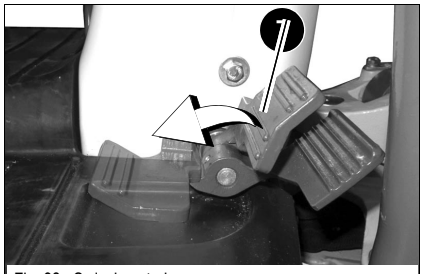

Fig. 98: Swivel controls

☞ *Unfold the right-hand pedal* **7**

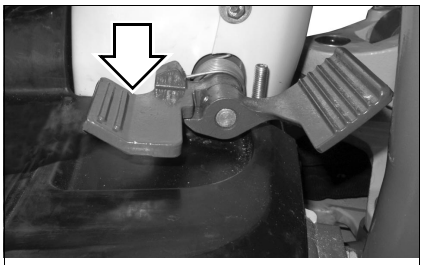
Fig. 99: Keeping the swiveling mechanism in position

☞ *Keep the right-hand pedal in position but do not press it*

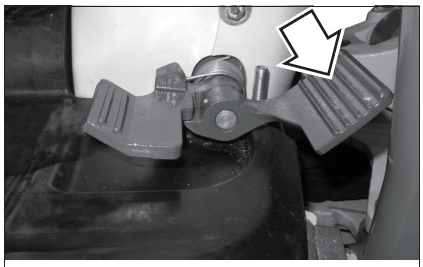

Fig. 100: Actuating the swiveling mechanism

Swiveling the boom to the left:

☞ Press the front half of the right-hand pedal

➥ Boom swivels to the left

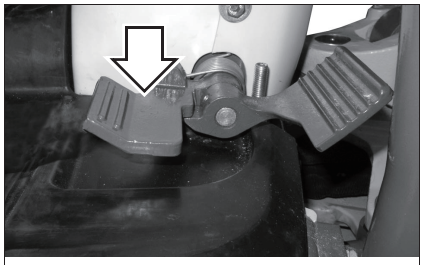

Fig. 101: Actuating the swiveling mechanism

Swiveling the boom to the right:

☞ Press the rear half of the right-hand pedal

➥ Boom swivels to the right

3.13 Auxiliary hydraulics

WARNING

Injury hazard due to auxiliary hydraulics operation!

Can cause serious injury or death.

- The auxiliary hydraulics function cannot be locked either by raising the lock lever, or by raising the pedal.
- Press the pedal carefully, otherwise the auxiliary hydraulics is actuated earlier than required.

Auxiliary hydraulics

WARNING

Injury hazard due to auxiliary hydraulics operation!

Can cause serious injury or death.

- The pedal is secured with a torsion spring. The pedal flips forward when it is released, but is not locked.

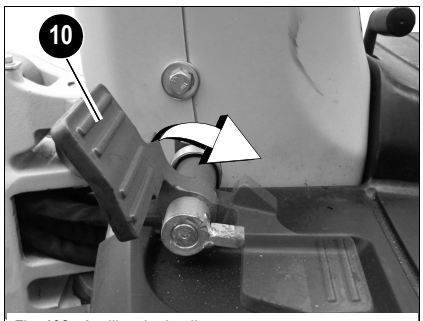

Fig. 102: Auxiliary hydraulics

☞ *Unfold the left-hand pedal **10***

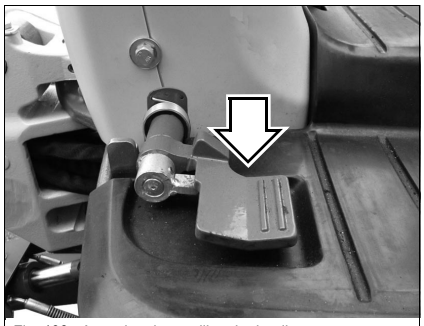
Fig. 103: Actuating the auxiliary hydraulics

☞ *Keep the left-hand pedal in position but do not press it*

Actuating the auxiliary hydraulics:

☞ *Press the left-hand pedal*

➥ Oil flows through the auxiliary hydraulics line

Auxiliary hydraulics (double-action option)

WARNING

Injury hazard due to auxiliary hydraulics operation!

Can cause serious injury or death.

- The pedal is secured with a torsion spring. The pedal flips forward when it is released, but is not locked.

Information!

Follow the instructions in the Operator's Manual of the attachment manufacturer for connecting the auxiliary hydraulics to an attachment.

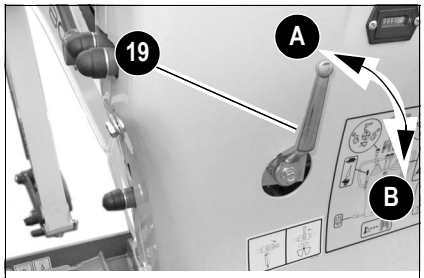

Fig. 104: Hammer and grab operation changeover

Hammer/grab operation changeover

Hammer/grab operation changeover is performed with lever 19

Position	Lever	Function
A	☞ *Turn lever* **19** *upward*	➥ Grab operation
B	☞ *Turn lever* **19** *to the right*	➥ Hammer operation

Hammer operation enabled

➥ Oil flows to the hammer through the pressure line and to the reservoir through the return line.

Grab operation enabled

- Standard: press the pedal backward – the grab rotates to the left.
- Standard: press the pedal forward – the grab rotates to the right.

➥ Oil flows forward through the left or right-hand pressure line.

Information!

Check the auxiliary hydraulics pedal for correct function.

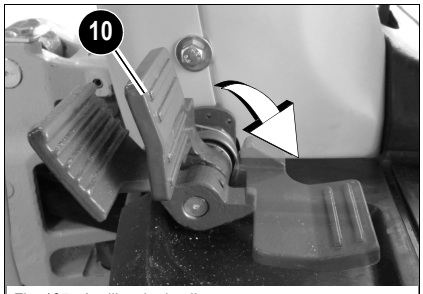

Fig. 105: Auxiliary hydraulics

☞ *Unfold the left-hand pedal **10***

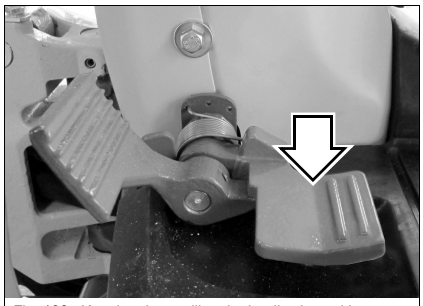
Fig. 106: Keeping the auxiliary hydraulics in position

☞ *Keep the left-hand pedal in position but do not press it*

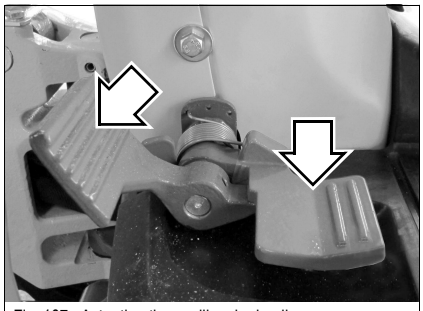
Fig. 107: Actuating the auxiliary hydraulics

Actuating the auxiliary hydraulics:

☞ *The left-hand pedal can be pressed forward or backward*

➥ Oil flows through the auxiliary hydraulics line

Emergency lowering

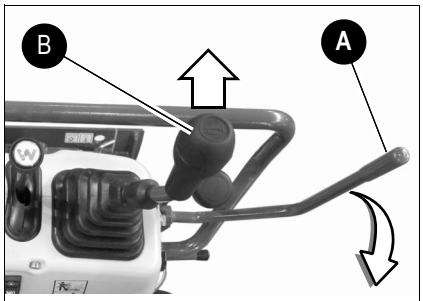

Fig. 108: Emergency lowering

WARNING

Crushing hazard during boom lowering!

Can cause serious injury or death.

- Ensure that no one is in the danger zone.

Information!

Lower the boom immediately after stopping the engine.

Observe the following during emergency lowering:

1 Lower lock lever **A**.

2 Push control lever **B** on the right forward until the boom is fully lowered to the ground.

3 Return control lever **B** to neutral.

Rotating the upper carriage

Specific safety instructions:

WARNING

Accident hazard due to possible further rotation of the upper carriage in cold operating state!

Can cause serious injury or death.

- The upper carriage can rotate a little bit further as long as the hydraulic fluid has not reached its operating temperature yet. Carefully operate the control lever in cold operating state.

WARNING

Crushing hazard due to upper carriage rotation on a slope!

Can cause serious injury or death.

- Operate the control levers especially carefully on a slope.

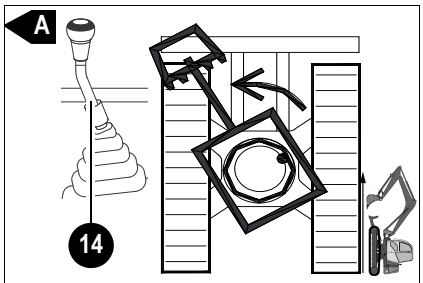

Fig. 109: Rotating the upper carriage to the left

If the control lever is actuated quickly, the upper carriage rotates quickly; if the control lever is actuated slowly, the upper carriage rotates slowly.

Rotate the upper carriage to the left as follows:

☞ *Push the control lever on the left* **14** *to the left* ***A***

➥ The upper carriage rotates to the left

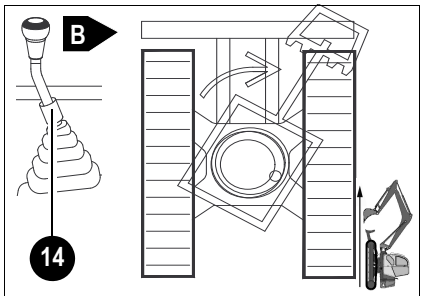

Fig. 110: Rotating the upper carriage to the right

Rotate the upper carriage to the right as follows:

☞ *Push the control lever on the left* **14** *to the right* ***B***

➥ The upper carriage rotates to the right

Upper carriage deceleration

Hydraulic swivel unit brake:

The upper carriage's rotation is sufficiently braked by moving control lever **14** on the left back to initial position. Moving the control lever in the opposite direction (counteraction) brakes the upper carriage with maximum hydraulic output.

3.14 Lock lever

WARNING

Crushing hazard due to unexpected movements of the machine or attachments!

Can cause serious injury or death.

- Raise the lock lever before leaving the machine.
- Locking the lock lever makes it impossible to perform any functions with the control and drive levers.
- The boom can still be swiveled if the lock lever is raised.
- The auxiliary hydraulics can still be operated if the lock lever is raised.

Lock lever

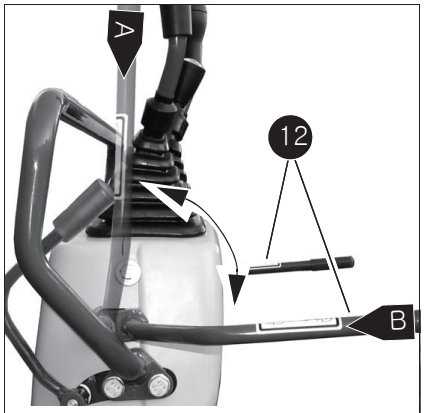

Fig. 111: Lock lever

Locking the lock lever

☞ Set lever 12 to position A

➥ The control levers are locked.

Unlocking the lock lever

☞ Set lever 12 to position B

➥ The control levers are unlocked.

3.15 Dual Power (option)

Dual Power enables zero-emission working by means of an electro-hydraulic power unit (HCE HPU) or conventional working with the diesel engine.

If the machine is equipped with the Dual Power option, hydraulic hoses are connected to the undercarriage of the machine.

WARNING

Accident hazard due to incorrect operation of the hydraulic power unit!

Can cause serious injury or death.

- Do not allow anyone to stay in the danger zone of the excavator.
- The power unit must be at the same level as the excavator.
- The operator must have permanent visual contact with the power unit.
- Do not pull the power unit with the hydraulic hoses.
- *– see chapter* ***Dual Power (option)*** on page 2-19

NOTICE

In order to avoid damage to the machine, HCE recommends operating the compact excavator in dual-power operation only with the HPU power unit.
During operation with a zero-emission power unit, there must be no biodegradable hydraulic oil in the excavator or power unit.

Information!

The optimal performance of the compact excavator in dual-power operation can only be ensured with the HPU power unit. However, if the maximum excavator connection values *– see chapter 6.6* ***Connection values of Dual Power option*** on page 6-3 are complied with, and if the hydraulic oil of the power unit and excavator is identical, other brands can be connected, too.

Information!

Do not travel across flexible hydraulic lines or connecting cables.

Overview of connections

NOTICE

Possible damage to the hydraulic system.

- Always couple and uncouple in the correct boom and stabilizer-blade position – *See* ***Coupling*** on page 3-57.
- Before coupling or uncoupling hoses, stop the power unit and the diesel engine of the excavator.

Environment!

Possible serious damage to the environment due to unconnected hydraulic lines.

- The hydraulic hoses of the power unit must be connected to the excavator before starting the power unit.

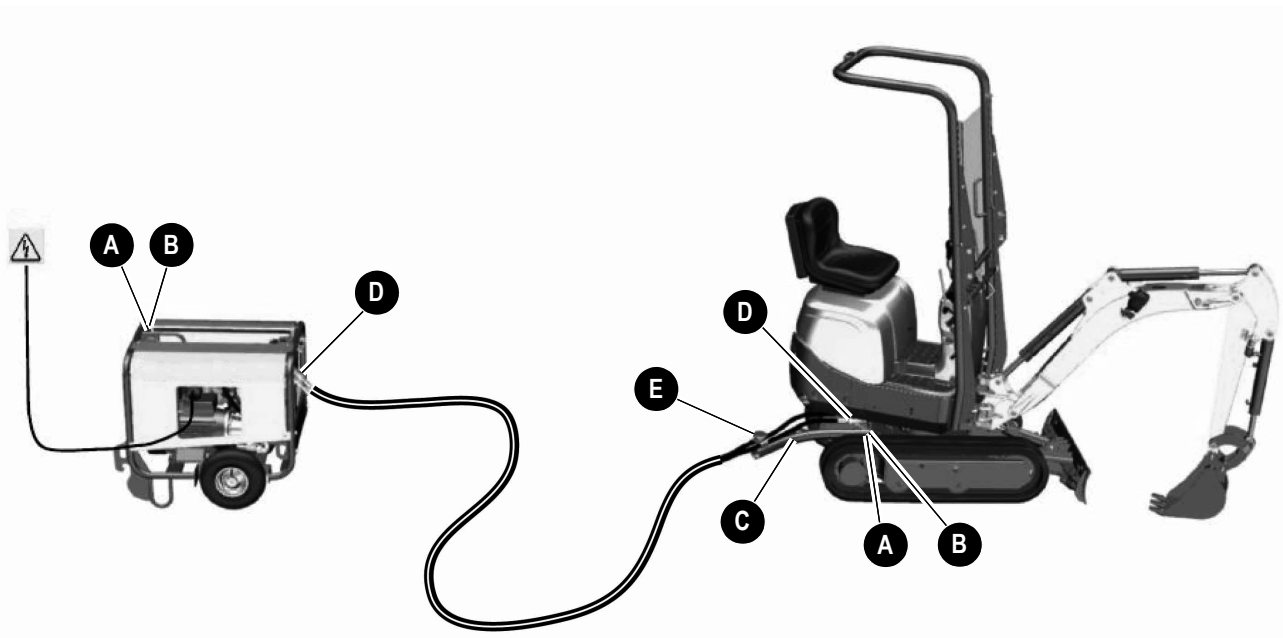

Fig. 112: Overview of connections (symbolic representation)

	Designation
A	Split pin
B	Pins
C	Lance
D	Hydraulic connections
E	Clamping screw

Coupling

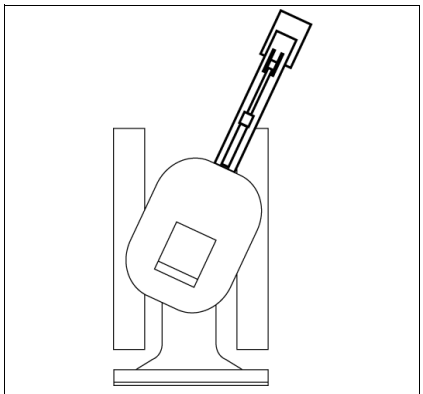

Fig. 113: (symbolic representation)

1 Put the excavator and the power unit on firm, level and horizontal ground.

2 Position the upper carriage as shown. The stabilizer blade must be at the rear.

3 Lower the stabilizer blade to the ground

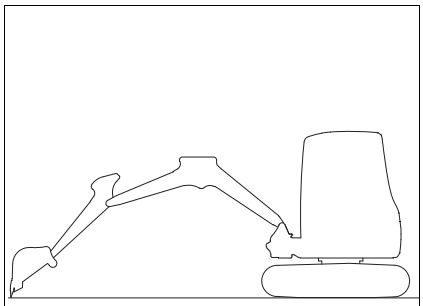

Fig. 114: (symbolic representation)

4 Position the bucket and the stick as shown.

5 Lower the boom to the ground.

6 Stop the diesel engine.

7 Remove the starting key and carry it with you.

8 Operate the control lever repeatedly to release the pressure in the hydraulic system.

9 Stop the power unit.

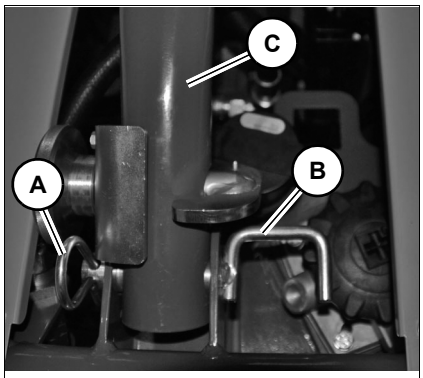

Fig. 115:

10 Pull out split pin **A** and pin **B** (at the front and rear) on the power unit and remove lance **C** from the power unit.

11 Fasten a pin and the split pin on the power unit again.

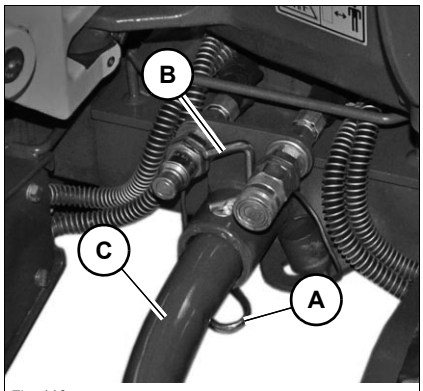

Fig. 116:

12 Insert lance **C** in the holder on the excavator and secure it with pin **B** and split pin **A**.

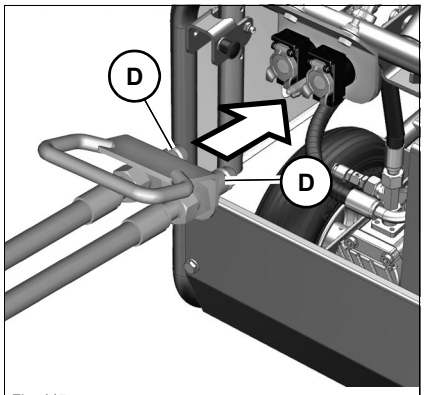

Fig. 117:

13 Connect the hydraulic hose connections **D** to the power unit.

CAUTION

Injury hazard due to sharp-edged objects!

Can cause injury.

- Wear protective gloves when coupling and uncoupling the hydraulic connections of the power unit.

Information!

Possible damage due to use of different hydraulic oil.

- The power unit and excavator must be filled with HVLP 46 hydraulic oil. Operation is prohibited if other oil types/grades or biodegradable hydraulic oil is used.

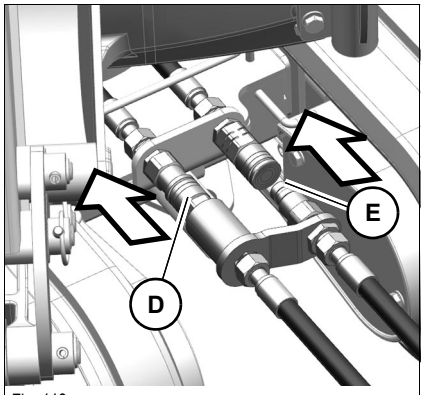

Fig. 118:

14 Connect the hydraulic hose connection **D** to the excavator.

15 Connect the hydraulic hose connection **E** to the excavator.

Environment!

Use a suitable container to collect fluids and lubricants as they flow out and dispose of them in an environmentally friendly manner.

Fig. 119:

16 Screw clamping screw **F** and fasten the hose on the lance as shown.

Checking the hydraulic oil levels of the power unit and excavator

Check the hydraulic oil levels before starting the power unit.

NOTICE

Possible damage to power unit or excavator.

- Check the hydraulic oil levels before starting and observe the following measures.
- Do not start the diesel engine of the excavator during power unit operation, otherwise the hydraulic oil levels of the power unit and excavator are changed.

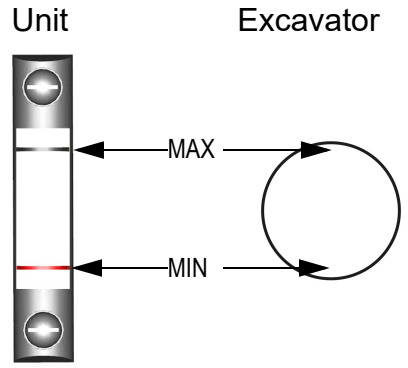

Fig. 120:

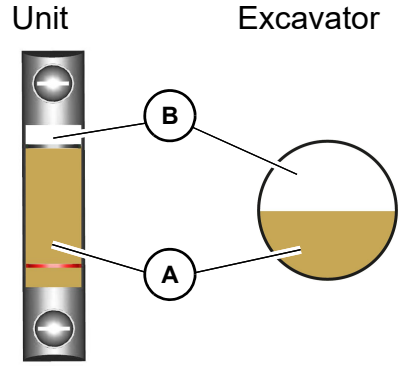

Fig. 121:

The power unit and excavator may only be put into operation if the hydraulic oil levels are between the MIN and MAX marks. Both hydraulic oil **(A)** and air **(B)** must be visible in the sight glass.

- Add hydraulic oil if no hydraulic oil can be seen in one of both sight glasses.
- Do not start operation if no air can be seen in one of the sight glasses. Contact a HCE service center.

Changeover from HPU to diesel operation

Fig. 122:

NOTICE

Possible damage to the excavator if the diesel engine is started in the **HPU** position.

- Stop the diesel engine and change over from HPU to diesel operation.

Key **A** for changing over between HPU and diesel operation is located in the document box behind the operator seat.

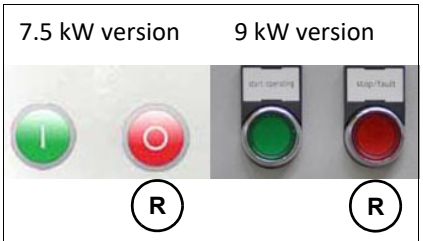

Fig. 123:

1 Stop the HPU: press the red push button **(R)**

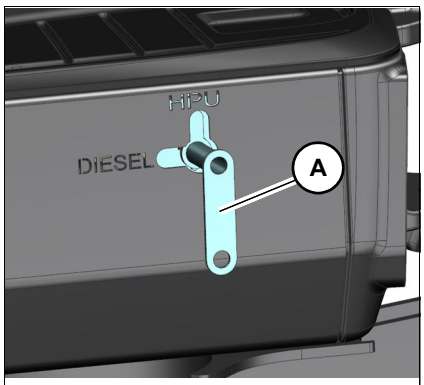

Fig. 124:

2 Insert key **A** and turn it anticlockwise to position **1**.

3 Remove key **A** and store it in the document box.

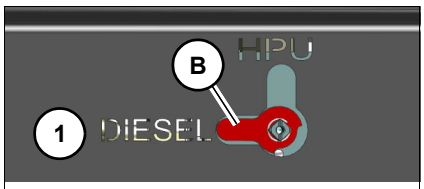

Fig. 125:

➥ Indication **B** must be in position **1**.

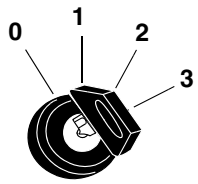

Fig. 126:

4 Start the diesel engine: turn the starting key to position **3**.

Changeover from diesel to HPU operation

Fig. 127:

Key **A** for changing over between HPU and diesel operation is located in the document box behind the operator seat.

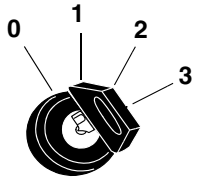

Fig. 128:

1 Stop the diesel engine: turn the starting key to position **0**.

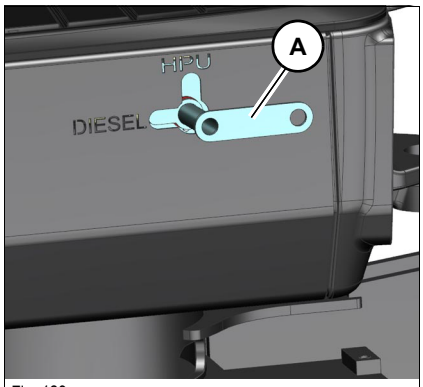

Fig. 129:

2 Insert key **A** and turn it clockwise to position **2**.

3 Remove key **A** and store it in the document box.

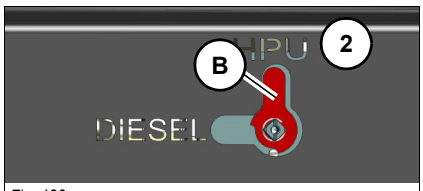

Fig. 130:

➥ Indication **B** must be in position **2**.

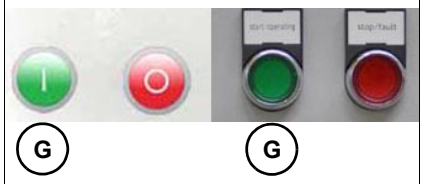

Fig. 131:

4 Switch on the HPU: press the green push button **(G)**

Uncoupling

CAUTION

Possible injury hazard due to sharp-edged objects!

Can cause injury.

- Wear protective gloves when uncoupling the hydraulic connections of the power unit.

NOTICE

Possible damage to power unit or excavator.

- Always couple and uncouple in the correct boom and stabilizer-blade position – *See* ***Coupling*** on page 3-57.
- The power unit and the excavator must be stopped before uncoupling.

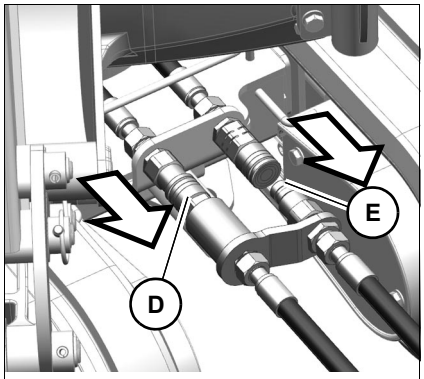

Fig. 132:

1 Uncouple the hydraulic hose connection **E** from the excavator.

2 Uncouple the hydraulic hose connection **D** from the excavator.

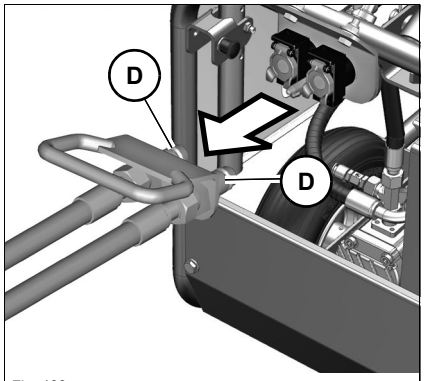

Fig. 133:

3 Uncouple the hydraulic hose connections **D** from the power unit.

Environment!

Use a suitable container to collect fluids and lubricants as they flow out and dispose of them in an environmentally friendly manner.

Charging the excavator battery

The excavator battery is not charged because the diesel engine does not during excavator operation with the zero-emission power unit. Charging the battery regularly is therefore necessary.

DANGER

Explosion hazard in case of incorrect handling of battery!

Incorrect battery handling can cause serious injury or death.

- The engine cover of the excavator must be open during recharging.
- Fire, open flames and smoking is prohibited.
- Perform charging only on well-ventilated premises.
- Do not charge malfunctioning or frozen batteries.

DANGER

Burn hazard due to hot engine parts!

Can cause serious burns.

- Stop the excavator engine and let it cool down.
- Wear protective equipment.

DANGER

Injury hazard due to rotating parts!

Rotating parts can cause serious injury or death.

- Open the excavator engine cover only at engine standstill.

NOTICE

Possible damage to the power unit and excavator.

- The power unit must be stopped during charging.

NOTICE

Possible damage to battery charger due to installation/routing near rotating parts.

- Do not place the battery charger cables near rotating parts.

Information!

Only operate battery chargers with the same specifications as the one supplied with the power unit. Observe the Operator's Manual of the battery charger. Contact a HCE service center in case of doubt.

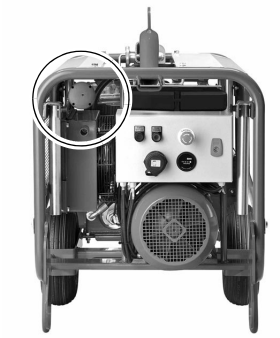

Fig. 134:

The battery charger is located in the storage compartment above the hydraulic-oil radiator of the power unit.

For more information, refer to the Operator's Manual of the battery charger. The Operator's Manual is located in the document box of the power unit.

The excavator battery can be charged in two different ways.

- With the power unit
- Directly with the 230 V mains

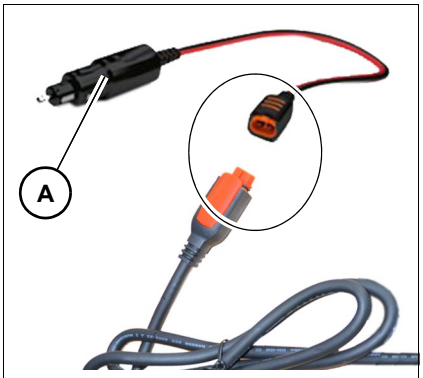

Fig. 135:

Connect the adapter connector and bushing of the battery charger.

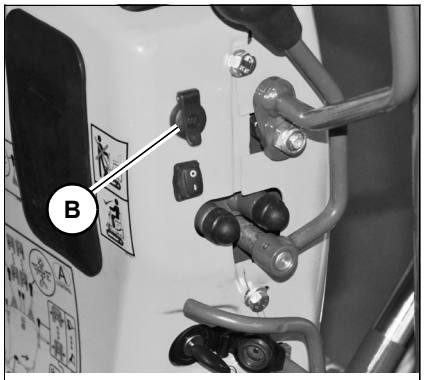

Fig. 136:

Connect the 12 V connector **A** to the 12 V outlet **B**.

Charging the battery with the power unit

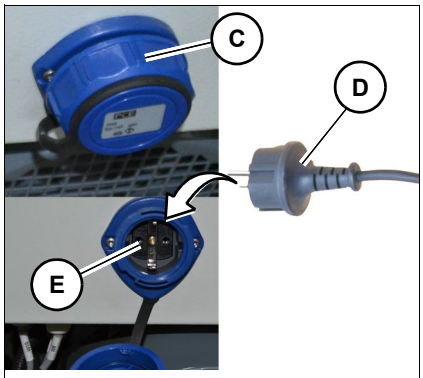

Fig. 137:

Turn protective cap **C** anticlockwise and remove it.

Connect safety connector **D** of the battery charger with the accessories outlet **E** of the power unit.

Charging the battery with the mains

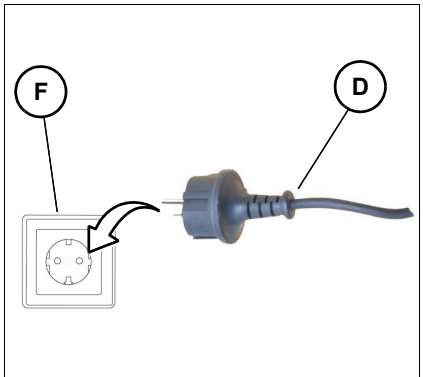

Fig. 138:

Connect safety connector **D** of the battery charger with a 230 V outlet **F**.

Environment!

Dispose of old batteries in an environmentally friendly manner.

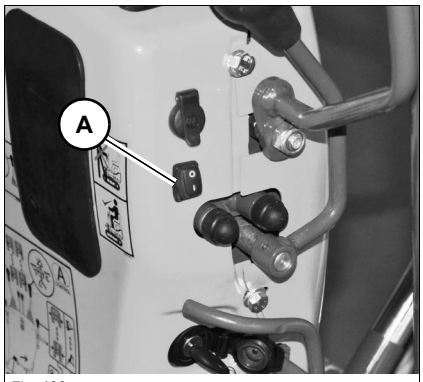

Fig. 139:

LED working light

The Dual Power option includes an energy-saving LED working light that is switched on and off with switch **A**.

Dual-Power operation with rotating beacon

The rotating beacon must be supplied with external power in countries or regions where a rotating beacon is mandatory during excavator operation.

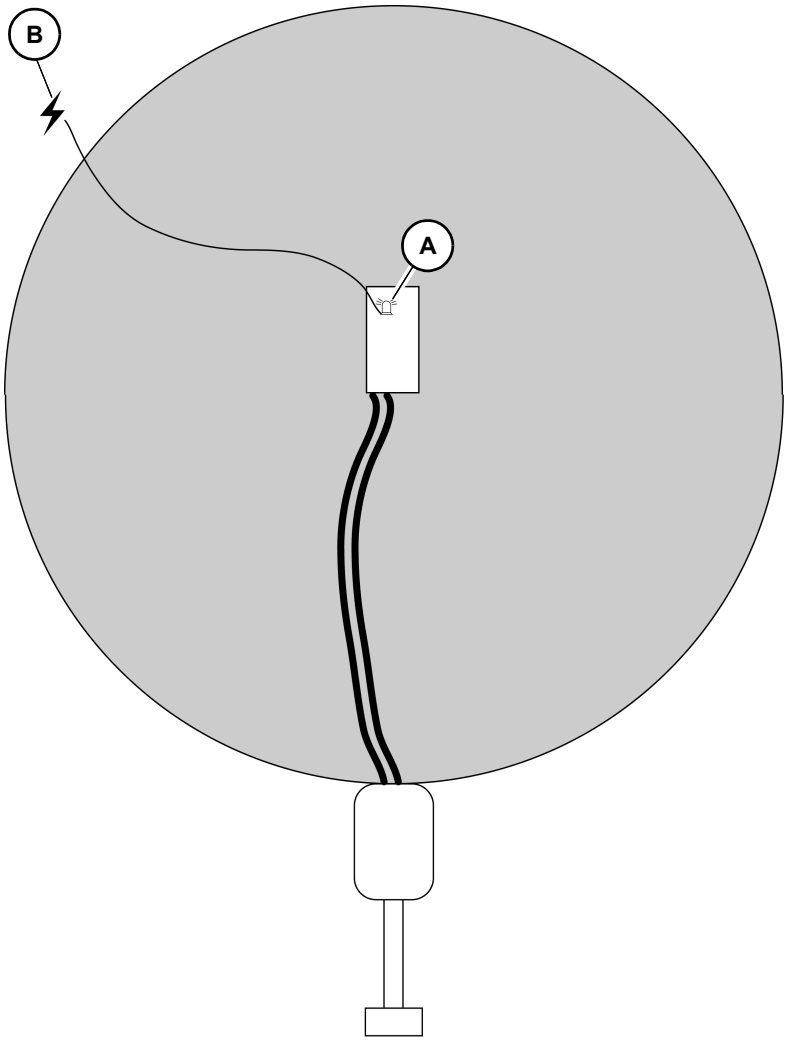

Connect rotating beacon **A** to the external power supply **B**. Connecting the rotating beacon to the accessories outlet of the power unit is prohibited.

Information!

Using a rotating beacon screwed onto the power unit is prohibited. HCE recommends a commercially available magnetic or clampable rotating beacon.

3.16 Relieve pressure from auxiliary hydraulics

NOTICE
Before connecting or removing hydraulic lines from an attachment with hydraulic functions, ensure that the hydraulics are not under pressure! Ensure that no one is in the danger zone of the machine

Information!

The hydraulic system of the machine is still pressurized even when the engine is not running! The hydraulic quick couplers can be released, however they cannot be re-attached due to the residual pressure in the lines.

- Release the pressure.
- Release the pressure in the sections of the system and hydraulic lines that are to be opened before starting setup or repair work, for example fitting/removing an attachment!

1. Stop the vehicle on firm, level, and horizontal ground.
2. Lower the attachment completely to the ground.
3. Lower the stabilizer blade to the ground.
4. Stop the engine.
5. Turn the starting key to position **1**.
6. The control lever base must be lowered.
7. Move the control element of the respective hydraulic circuit several times in all directions and hold each time as far as it will go for three seconds.
   ➥ The pressure reduces. This can be seen by the brief movement the hoses make as the pressure is released.
8. Turn the starting key to position **0**.
9. Uncouple the attachment immediately after the pressure has been released, otherwise pressure can be created again.

Removed attachments with hydraulic connections must not be stored in sunlight to ensure pressure does not build in the lines.

Clean the hydraulic quick couplers before connecting to ensure dirt does not penetrate the hydraulic system.

3.17 Re-equipping attachments

Re-equipping the attachments is described below for a bucket. If you are fitting or removing attachments with their own hydraulic functions – grab or offset bucket, for example – you must follow the special information given in the Operator's Manual of the attachment.

Specific safety instructions

- Driving in pins with a plastic hammer can cause them to splinter, which can cause serious injury.
  ☞ Always wear goggles, a hard hat, protective gloves, safety shoes and other suitable protective clothing.
- Do not stand behind the bucket when removing pins.
  ☞ Do not place your foot underneath the bucket.
- Pay special attention to your fingers when removing and reinserting pins.
- Never insert fingers in the bores of the pins as you align them.

WARNING

Injury hazard during modification work!

Can cause serious injury or death.

- Avoid accidents and injury by following the information below:
  - Stop the engine
  - Raise the lock lever
  - Remove the starting key
  - Re-equip attachments only with suitable tools
  - Do not align components with your fingers or your hands but use suitable tools – crushing hazard!
- After you have re-equipped an attachment, or before starting work, ensure that the attachment is safely locked in the stick and the joint rod.

Removing a bucket

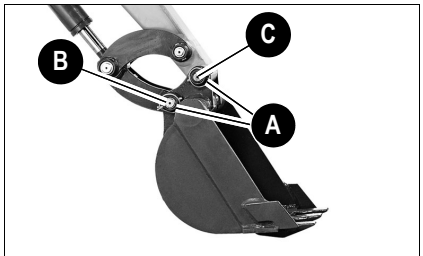

Fig. 140: Removing a bucket

- Lower the bucket to level ground with the flat side facing downward
- Stop the engine
- Raise the lock lever
- Remove the starting key
- Remove linch pins **A**
- First remove the bolt **B**, then bolt **C**; carefully drive out seized pins with a hammer and brass punch

If pin **C** is stuck:

- Starts the engine
- Slightly raise and lower the boom to take the load off the pin
- Stop the engine
- Raise the lock lever
- Remove the starting key

Information!

Place the bucket only with minimum pressure on the ground as you remove the pins. The higher the pressure on the ground, the higher the resistance and the more difficult it is to remove the pins.

Installing a bucket

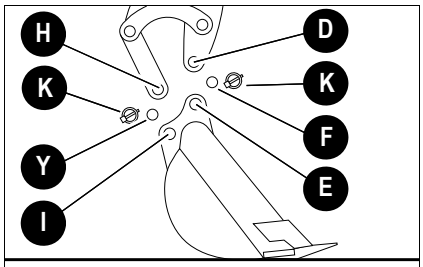

Fig. 141: Installing a bucket

- Install a bucket only if it is positioned on level ground with the flat side facing downward
- Apply grease to the pins and joints before inserting the pins
- Starts the engine
- Straighten the stick so that bores **D** and **E** are flush
- Insert greased pin **F**
- Actuate the stick cylinder until bores **H** and **I** are flush
- Insert the greased pin **J**
- Install linch pins **K**

Lehnhoff mechanical quickhitch system (optional)

- The quick coupler system and the attachment support must be undamaged and clean.
- Store the Operator's Manual of the mechanical quick coupler system together with the Operator's Manual of the vehicle.
- The described operation does not apply to the face shovel. Contact an authorized workshop for face shovel operation.

WARNING

Crushing hazard when picking up attachments!

If an attachment is not locked correctly, it can come off and cause serious injury or death.

- Do not allow anyone to stay in the danger zone.
- During locking and unlocking procedures, make sure that hands and feet are not crushed.
- Only use undamaged attachments and quick coupler systems.
- Before starting any work and after every locking process, press the attachment to the ground and quickly move it back and forth over just over the ground a few times to check the secure locking.
- Only operate the vehicle with a safely locked attachment.

WARNING

Crushing hazard when attachments are removed!

If an attachment is not removed correctly, it can tip over and cause serious injury or death.

- Do not allow anyone to stay in the danger zone.
- Lower the attachment to level and firm ground ensuring stability.

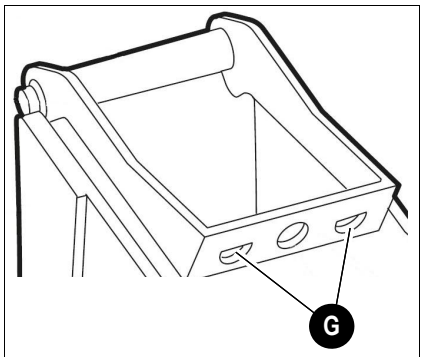

Fig. 142:

Support

G: Openings for quick coupler system bolts

Picking up an attachment

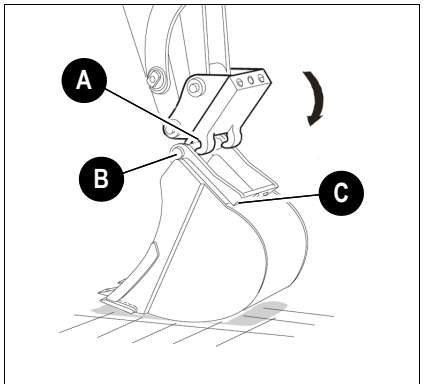

Fig. 143:

1. Hook up the quick coupler system **A** in the attachment bolt **B**.
2. Slightly screw in the quick coupler system **A**, lift the shovel arm until the attachment is suspended about 30 cm (12 in) above the ground.
3. Extend the bucket cylinder so that the edge **C** of the attachment touches the quick coupler system.

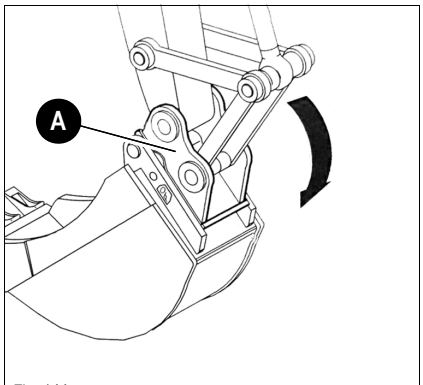

Fig. 144:

4. Screw in the quick coupler system **A** until the attachment lies completely on the quick coupler system **A** due to its weight.
5. Shut off the engine and store the ignition switch key safely.

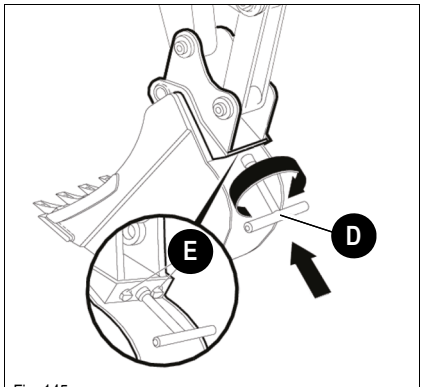

Fig. 145:

6. Screw socket wrench **D** clockwise until the bolts **E** completely engage in the openings **G** of the quick coupler system **A**.
   ➥ The quick coupler system is locked.
7. Remove the socket wrench and perform a visual inspection.
8. Start the engine.

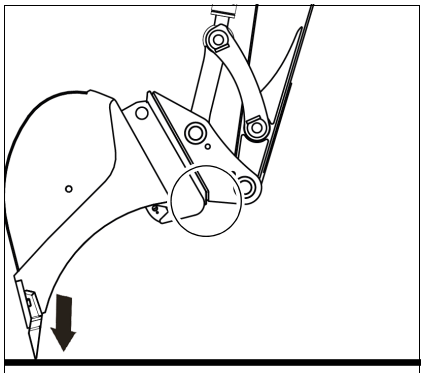

Fig. 146:

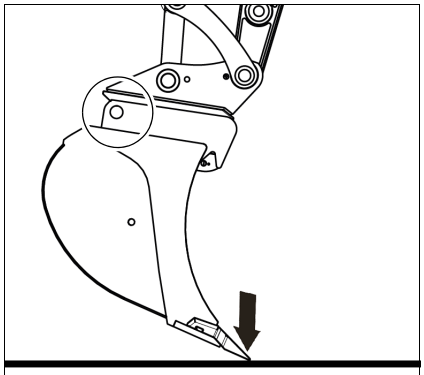

Fig. 147:

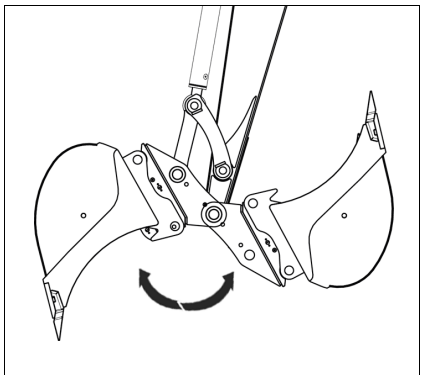

Fig. 148:

9. Before starting any work and after every locking process, press the attachment to the ground and quickly move it back and forth over just over the ground a few times.
   ➥ The attachment may not detach from the quick coupler system in the process.

Setting down an attachment

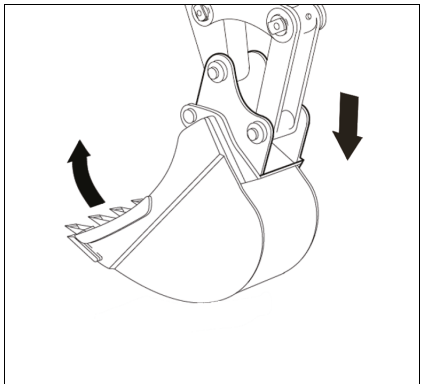

Fig. 149:

1. Screw in the attachment and position it at 5 – 10 cm (2 – 4 in) above the ground.
2. Shut off the engine and store the ignition switch key safely.

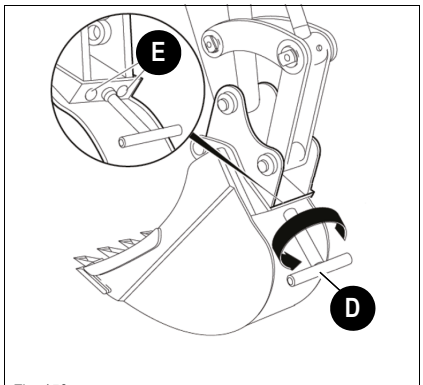

Fig. 150:

3. Turn the socket wrench **D** counter-clockwise until the bolts **E** are completely retracted.
   ➥ The quick coupler system is unlocked.
4. Remove the socket wrench.
5. Start the engine.
6. Lower the attachment to level and firm ground ensuring stability.

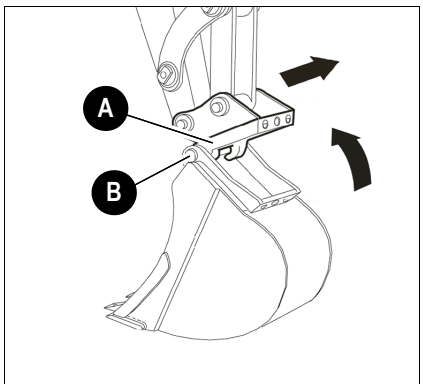

Fig. 151:

7. Retract the bucket cylinder and quick coupler system **A** from the attachment bolt **B**.

Maintenance schedule of Lehnhoff mechanical quickhitch system

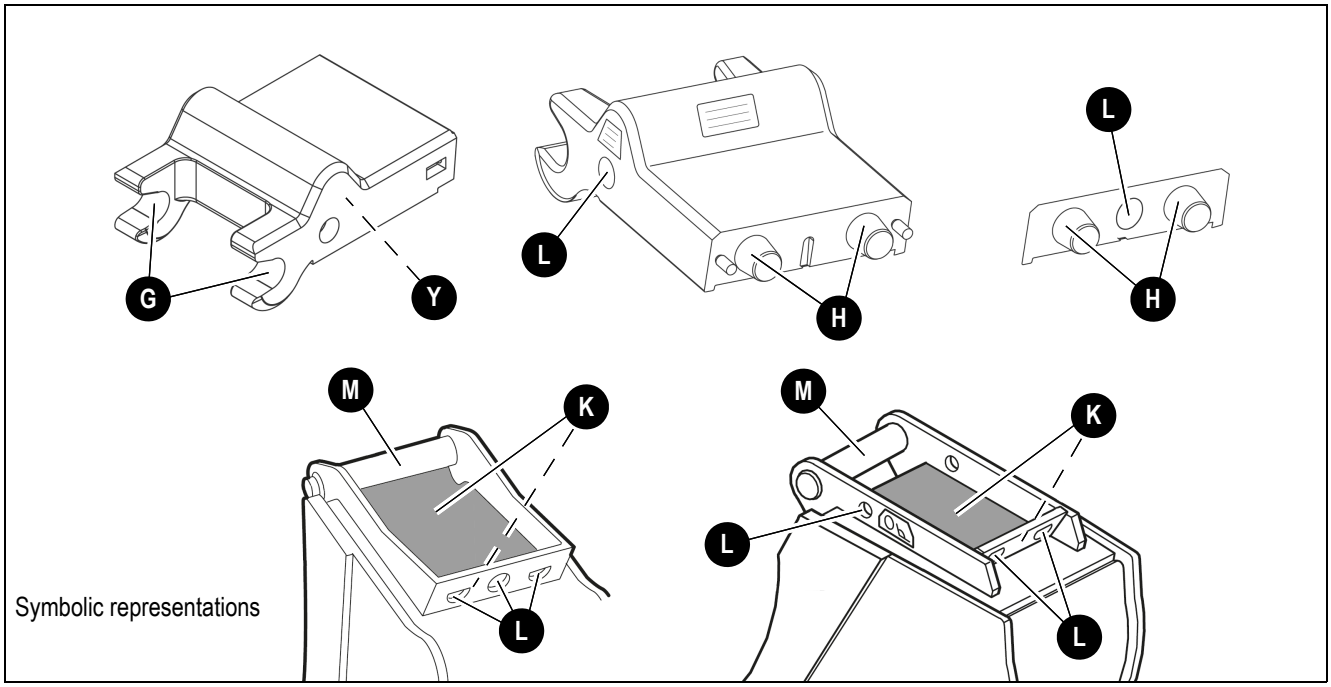

Symbolic representations

Quick coupler system MS01 maintenance (operator)		Interval[1]
Perform visual inspection of the quickhitch system	--	10 hours of operation/daily
Clean bolt guide	**G**	50 hours of operation/weekly
Clean the bolt contact surface	**H**	50 hours of operation/weekly
Clean bottom side of the quick coupler system	**Y**	50 hours of operation/weekly
Clean contact surfaces of the attachment	**K**	50 hours of operation/weekly
Clean the opening for the socket wrench and bores of the attachment support	**L**	50 hours of operation/weekly
Clean bolt attachment support	**M**	50 hours of operation/weekly

1. For time specifications: the first achieved time specification is decisive. If the situation requires it, perform maintenance if necessary, even if the maintenance interval has not yet been reached.

Other maintenance intervals (authorized service center)

- Every 250 hours of operation or half-yearly
- Every 500 operating hours or annually

For additional details contact a HCE service center.

Connections for auxiliary hydraulics

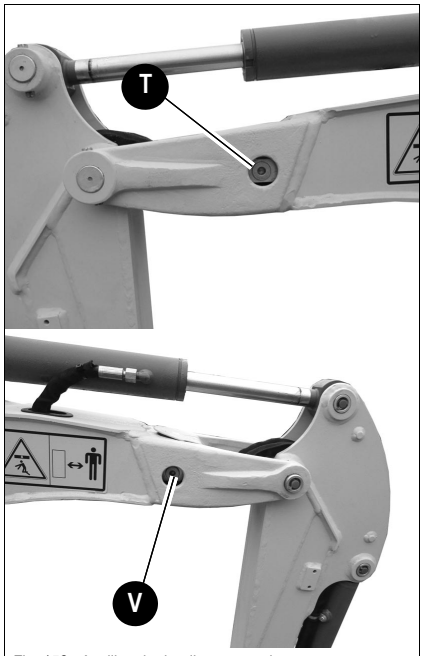

Fig. 152: Auxiliary hydraulics connections

Information!

For hammer operation we recommend installing the hydraulic lines up to the stick in order to avoid damage – *see chapter* ***Connections for auxiliary hydraulics (stick hose routing option)*** on page 3-76.

Auxiliary hydraulics can be connected as required.
If the machine is equipped with the double-action auxiliary hydraulics option, only the flow direction of the hydraulic oil changes.

Connection	Left side of boom	Right side of boom
T	☞ *Return line*	
V		☞ *Pressure line*

Information!

Follow the instructions in the Operator's Manual of the attachment manufacturer for connecting the auxiliary hydraulics to an attachment.

Connect and disconnect as follows:

☞ Park the machine on level and horizontal ground.

☞ Extend the stick cylinder halfway through.

☞ Stop the engine.

☞ Release the pressure on the operating hydraulics .
– see chapter 3.16 Relieve pressure from auxiliary hydraulics on page 3-67

➥ The attachment couplings can be connected.

☞ Raise the lock lever.

☞ Remove the starting key.

Connections for auxiliary hydraulics (stick hose routing option)

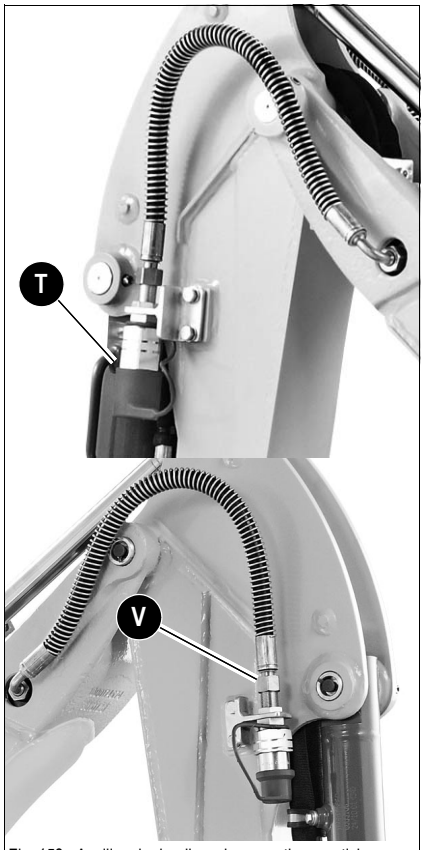

Fig. 153: Auxiliary hydraulics – hose routing on stick

Auxiliary hydraulics can be connected as required.

If the machine is equipped with the double-action auxiliary hydraulics option, only the flow direction of the hydraulic oil changes.

Connection	Stick (left)	Stick (right)
T	☞ *Return line*	
V		☞ *Pressure line*

Information!

Follow the instructions in the Operator's Manual of the attachment manufacturer for connecting the auxiliary hydraulics to an attachment.

Connect and disconnect as follows:

☞ Park the machine on level and horizontal ground.

☞ Extend the stick cylinder halfway through.

☞ Stop the engine.

☞ Release the pressure on the operating hydraulics .

– see chapter 3.16 Relieve pressure from auxiliary hydraulics on page 3-67

➥ The attachment couplings can be connected.

☞ Raise the lock lever.

☞ Remove the starting key.

Attachments

Information!

Please refer to the Operator's and maintenance manual of the attachment manufacturer for using and performing maintenance on attachments such as hammers, etc.

Information!

Check the auxiliary hydraulics pedal for correct function.

Maintenance of attachments

Information!

Correct maintenance and service is absolutely necessary for smooth and continuous operation, and for an increased service life of the attachments. Observe the lubrication and maintenance instructions in the Operator's Manuals of the attachments.

Working with the standard bucket

The following section describes work operations with the machine equipped with the standard bucket.

The standard bucket is mainly used for earth-moving applications, and for loosening, picking up, digging and loading loose material (or material to be loosened).

Inadmissible work procedures

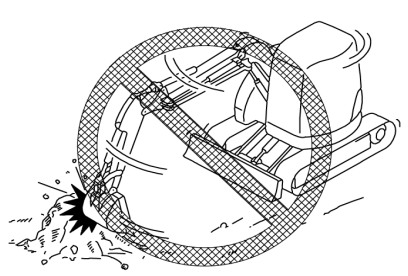

Fig. 154: Working with the swivel force

Working with the swivel force

☞ *Do not use the swivel force of the upper carriage to compact the ground or tear down piles or walls.*

☞ *Do not touch the ground with the bucket as you rotate the upper carriage.*

➥ Working this way damages the attachments.

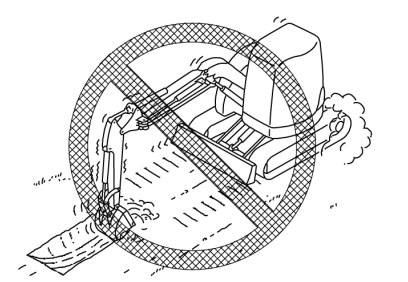

Fig. 155: Working with the drive force

Working with the drive force

☞ *Do not allow the bucket to penetrate into the ground and do not excavate by using the drive force of the machine.*

➥ Working this way can damage the machine or the attachments.

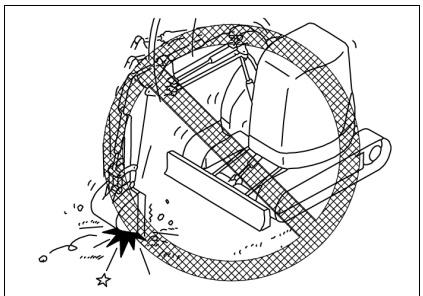

Fig. 156: Working with the falling force by lowering the bucket

Working with the falling force by lowering the bucket

☞ *Do not use the machine's falling force for excavating, and do not use the bucket's falling force as a hoe, hammer or pile-driver.*

➥ Working this way can greatly reduce the machine's service life.

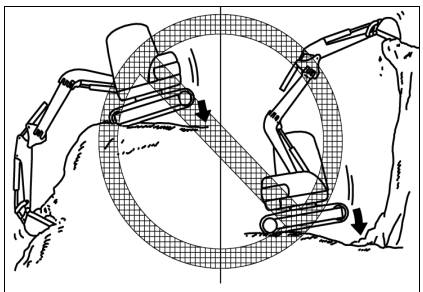

Fig. 157: Working with the machine's falling force

Working with the falling force by lowering the machine

☞ *Do not use the machine's falling force for excavating.*

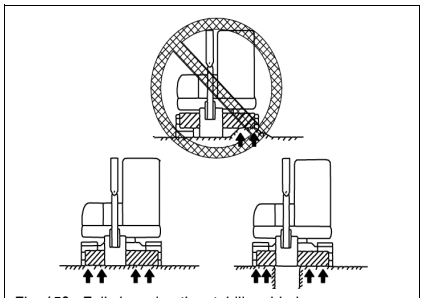

Fig. 158: Fully lowering the stabilizer blade

No thrusting the stabilizer blade

☞ *Do not thrust the stabilizer blade against rocks or blocks to avoid damage to the cylinders and the blade itself.*

Fully lowering the stabilizer blade

☞ *Fully lower the stabilizer blade when using it on the side opposite the excavation side.*

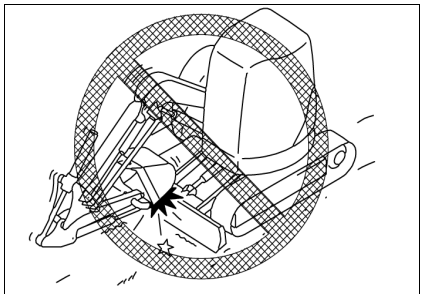

Fig. 159: Retracting attachments

Retracting attachments

☞ *Ensure that the bucket does not hit the stabilizer blade as you retract attachments for driving or transport.*

Excavator work position

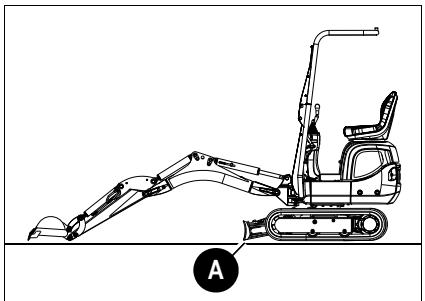

Fig. 160: Excavator work position

☞ *Place stabilizer blade **A** on the side you want to dig*

Bucket position when digging

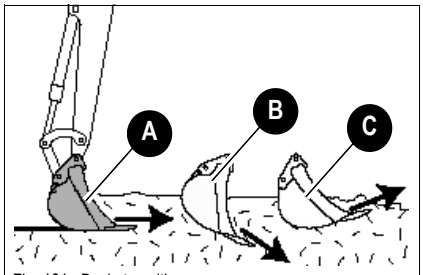

Fig. 161: Bucket position

☞ *Move the bucket as shown in **A**.*

➥ Move the flat side of the bucket parallel to the ground.

Information!

Position **B** causes the bucket to penetrate into the ground. Work slows down, and the engine and the hydraulic pump are subject to overload if this position is used over a longer period of time!
Position **C** causes the bucket to be forced upward and not to be filled completely.

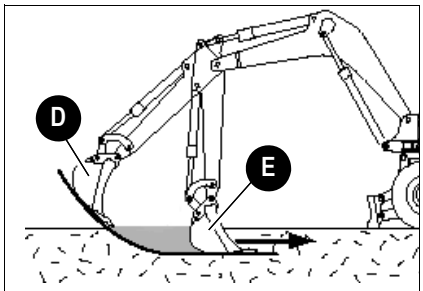

Fig. 162: Penetrating into the ground with the bucket and aligning it

☞ *Excavate as follows:*

- Penetrate into the ground with bucket **D**
- Lower the stick and at the same time align bucket **E** until
- reaching the required digging depth and
- the flat side of the bucket is parallel to ground

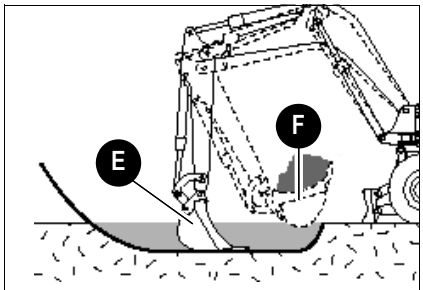

Fig. 163: Filling the bucket

☞ *Pull bucket* **E** *parallel to the ground toward the excavator; if possible, at the same time:*

- Move the stick toward the excavator
- Lower the boom

☞ *With a sufficiently full bucket* **E***:*

- Keep on moving the stick toward the excavator and at the same time
- Tilt in stick **F**

Excavating trenches

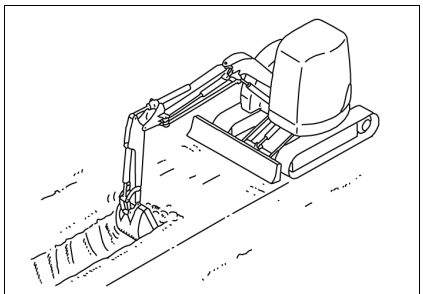
Fig. 164: Excavating trenches

- Excavating trenches is more efficient
  - ☞ by using a suitable bucket for this work and positioning the tracks parallel to the limit line of the trench.
  - ☞ In case of large trenches, first excavate the side sections and then the center section.

Loading

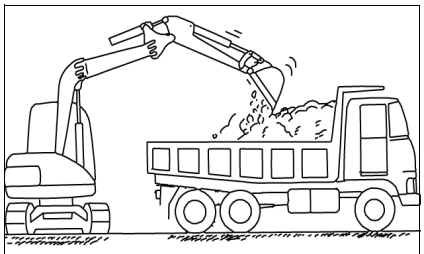

Fig. 165: Loading

- Loading in confined areas with a limited angle of rotation is more efficient
  ☞ by positioning the transport vehicle so as to ensure maximum visibility of the transport vehicle for the operator of the excavator.
- Loading material onto transport vehicles is more efficient
  ☞ if the excavator is at the rear end of the transport vehicle and not at the side.

Grading

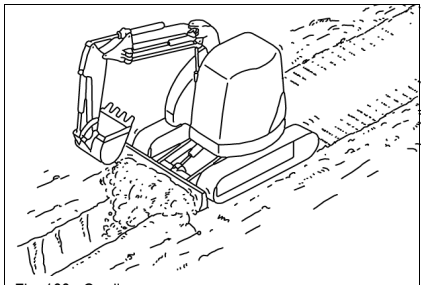

Fig. 166: Grading

- Use the stabilizer blade to fill in trenches and to grade (even out) surfaces.

Information!

Work on level ground. Grade (even out) with the stabilizer blade first in case of sloping ground.

Excavating trenches sideways

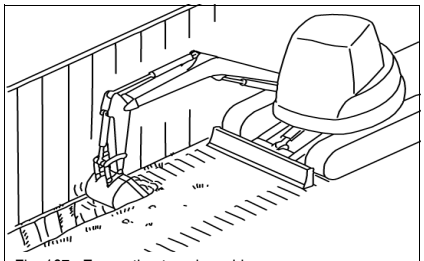

Fig. 167: Excavating trenches sideways

- The machine can be used for excavating trenches sideways in confined areas
  ☞ by rotating the upper carriage and swiveling the main boom (combined position and movement of both).

Further recommendations for digging

When planning and performing digging work, we recommend that you observe the following points:

- Exits from pits must be outside the digging line and as level as possible.
- Dig by removing adjacent strips if possible.
- Ensure that you can drive forward when driving out of the digging area with a fully loaded bucket.
- Whenever possible, perform reverse machine travel when transporting a full bucket down a steep slope.

Freeing the machine

If the machine gets stuck in the ground:

☞ *Dump out/rotate the bucket until the blade/teeth are vertical above the ground*

☞ *Lower the boom all the way*

☞ *Slowly dump out the bucket*

➥ The machine is pushed backward

☞ *Reverse slowly*

☞ *Repeat this procedure until the tracks reach firm ground*

☞ *Reverse the machine away*

3.18 Grading

WARNING

Accident hazard when grading!

Can cause serious injury or death.

- Ensure that no one is in the danger zone when working with the stabilizer blade

Grading

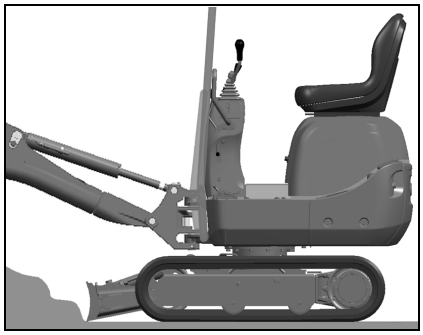

☞ Lower the stabilizer blade to the ground
– see chapter Stabilizer blade operation on page 3-20

☞ Set the depth of the layer you want to remove with the stabilizer blade lever

➥ The machine must not be raised by lowering the stabilizer blade

➥ The clearance between the stabilizer blade and the ground should be about 1 cm

Working on slopes

WARNING

Tipping hazard of machine on slopes!

A tipping vehicle can cause serious injury or death.

- Secure slopes before beginning work. Pay attention to ground conditions, vehicle weight, etc.
- Stabilize the vehicle with the stabilizer blade during excavation work.

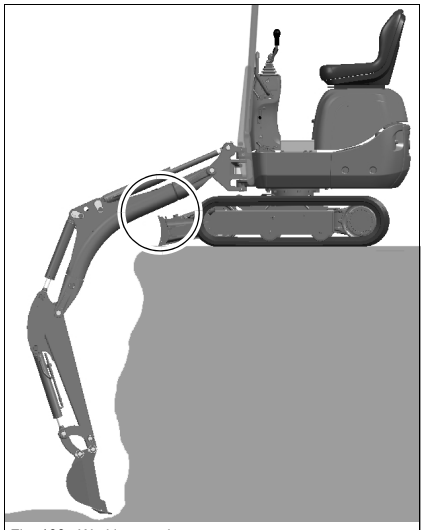

Fig. 168: Working on slopes

NOTICE

Lifting arm cylinders can be damaged by improper operation.

- The piston rod must not touch the stabilizer blade.

Hints for digging

When planning and performing digging work, HCE recommends that you observe the following points:

- Exits from pits must be outside the digging line and as level as possible.
- Dig by removing adjacent strips if possible.
- Ensure that you can drive forward when driving out of the digging area with a fully loaded bucket.
- Perform transport trips downhill with loaded bucket in reverse operation.

Freeing the machine

If the vehicle gets stuck in the ground:

- Tilt out the bucket until the blade is vertical above the ground.
- Lower the boom all the way.
- Slowly tilt out the bucket.

  ➥ The vehicle is pushed backward.
- Reverse slowly.
- Repeat this procedure until the tracks reach firm ground.
- Reverse the vehicle away.

4 Malfunctions

The information given in this chapter is provided for maintenance personnel, for fast and reliable detection of malfunctions and their appropriate repair.

Repairs must only be performed by authorized personnel.

4.1 Engine trouble

Problem	Possible causes	See
Engine does not start or is not easy to start	Wrong SAE grade of engine lubrication oil	5-34
	Fuel grade does not comply with specifications	5-34
	Malfunctioning or empty battery	5-29
	Loose or oxidized cable connections in starter circuit	
	Malfunctioning starter, or pinion does not engage	
	Wrong valve clearance	
	Malfunctioning injection nozzle	
	Malfunctioning cutoff solenoid	
	Malfunctioning fuse	
Engine starts, but does not run smoothly or faultless	Fuel grade does not comply with specifications	5-34
	Dirty fuel filter	
	Wrong valve clearance	
	Air in fuel system	
	Injection line leaks	
	Malfunctioning injection nozzle	
Engine overheats. Temperature warning system responds	Oil level too low	5-7
	Oil level too high	5-7
	Dirty air filter	5-12
	Dirty oil radiator fins	5-8
	Coolant level too low	
	Cooling system leaks	
	Malfunctioning fan, torn or loose V-belt	5-14
	Resistance in cooling system too high, flow capacity too low	
	Malfunctioning injection nozzle	

Problem		Possible causes	See
Insufficient engine power		Oil level too high	5-7
		Fuel grade does not comply with specifications	5-34
		Dirty air filter	5-12
		Wrong valve clearance	
		Injection line leaks	
		Malfunctioning injection nozzle	
Engine does not run on all cylinders		Malfunctioning fuel injection pump	
		Injection line leaks	
		Malfunctioning injection nozzle	
Insufficient or no engine oil pressure		Oil level too low	5-7
		Vehicle slanting position too high (max. 15°)	
		Wrong SAE grade of engine lubrication oil	5-34
Engine oil consumption too high		Oil level too high	5-7
		Worn oil scraper rings	
		Vehicle slanting position too high (max. 15°)	
		Wrong SAE grade	
Engine smoke	Blue	Oil level too high	5-7
		Vehicle slanting position too high (max. 15°)	
		Wrong oil	
	White	Engine starting temperature too low	
		Fuel grade does not comply with specifications	5-34
		Wrong valve clearance	
		Malfunctioning injection nozzle	
		Malfunctioning cylinder-head gasket	
	Black	Dirty air filter	5-12
		Wrong valve clearance	
		Malfunctioning injection nozzle	
The working light does not light up		The excavator's battery has too low voltage during dual power operation. Charge the battery.	3-63

5 Maintenance

5.1 Introduction

Operational readiness and the service life of machines are heavily dependent on maintenance.

It is therefore in the interest of the machine owner to perform the mandatory maintenance

Bear in mind the following points before performing servicing and maintenance:

- Chapter 2 “SAFETY INSTRUCTIONS” of this Operator’s Manual
- The Operator’s Manuals of the attachments.

Perform the prescribed inspections and rectify any disorders before putting the machine into operation.

Secure the open engine cover and other open covers appropriately. Do not open the engine cover and other covers on slopes or in strong wind.

When using compressed air, dirt and debris can be blown into your face. Therefore, wear safety glasses, protective masks and clothing when using compressed air.

Daily servicing and maintenance, and maintenance according to maintenance plan **“A”** must be performed by a specifically trained operator. All other maintenance work must be performed by trained and qualified personnel only.

The following maintenance plans indicate the maintenance to be performed.

This is necessary to ensure optimal functioning.

– *see* ***Maintenance plan (overview)*** on page 5-37.

Immediately repair or replace parts that are already damaged or not working properly before they are due for replacement.

Information!

Safety-relevant parts may only be repaired or replaced by a HCE dealer or a HCE service center.

Parts	Interval
Hydraulic hoses	Replace hydraulic hoses every 6 years from the date of manufacture, even if they do not seem to be damaged.
Seat belt	No replacement necessary. Replace the seat belt after an accident.

5.2 Fuel system

Specific safety instructions

WARNING

Burn hazard when refueling!

Can cause serious injury or death.

- Fire, open flames and smoking is prohibited.
- Keep the maintenance area clean.
- Do not refuel in closed rooms.
- Do not add gasoline to the diesel fuel.
- Let the engine cool down.

WARNING

Health hazard due to diesel fuel!

Can cause serious injury or death.

- Avoid contact with the skin, eyes and mouth.
- Seek medical attention immediately in case of accidents with diesel fuel.
- Wear protective equipment.

WARNING

Fire hazard due to diesel fuel!

Can cause serious injury or death.

- Fire, open flames and smoking is prohibited.
- Adding gasoline is prohibited.

- Before refueling, stop the engine, raise the lock lever and remove the starting key!
- Do not refuel in closed rooms!
- Wipe away fuel spills immediately!
- Keep the vehicle clean to reduce the fire hazard!

Refueling

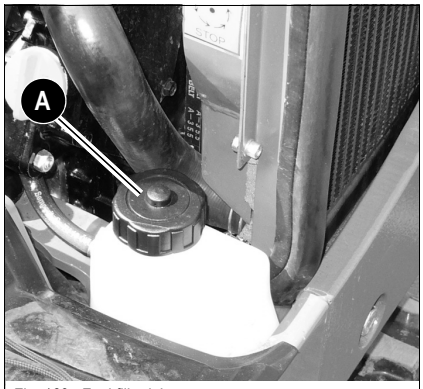

Fig. 169: Fuel filler inlet

Filler inlet **A** for the fuel tank is located in the engine compartment, on the left in driving direction.

Environment!

Use a suitable container to collect the fuel as it drains and dispose of it in an environmentally friendly manner!

Information!

Do not run the fuel tank completely dry. Otherwise, air is drawn into the fuel system. This requires bleeding the fuel system – *see* ***Bleeding the fuel system*** on page 5-4.

Information!

Fill up the tank with the correct fuel type at the end of each working day. This prevents condensation water from forming in the fuel tank over night. Do not fill the tank completely but leave some space for the fuel to expand.

Drain fuel

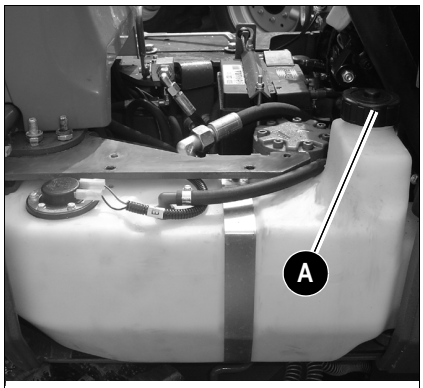

Fig. 170: Fuel tank

Environment!

Use a suitable container to collect the fuel as it drains and dispose of it in an environmentally friendly manner!

Filler inlet **A** for the fuel tank is located in the engine compartment, on the left in driving direction.

Proceed as follows:

☞ Open filler inlet **A**

☞ Pump out the fuel with a suitable pump

☞ Collect the fuel in a suitable container

Stationary fuel pumps

General

Only refuel from stationary fuel pumps. Fuel from barrels or cans is usually dirty.

Even the smallest particles of dirt can cause

- Increased engine wear
- Malfunctions in the fuel system
- Reduced effectiveness of the fuel filters

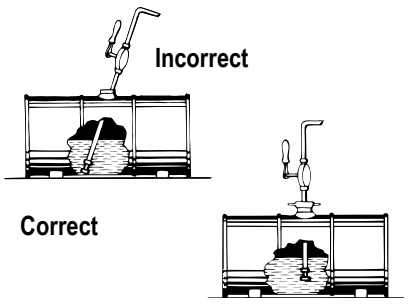

Fig. 171: Refueling from a barrel

Refueling from barrels

If refueling from barrels is unavoidable, please note the following (see Fig. 198):

- Barrels must neither be rolled nor tilted before refueling
- Protect the suction pipe opening of the barrel pump with a fine-mesh screen
- Immerse the suction pipe opening down to a max. 15 cm (6 in) above the bottom of the barrel
- Only fill the tank using refueling aids (funnels or filler pipes) with an integral microfilter
- Keep all refueling containers clean at all times

Bleeding the fuel system

WARNING

Injury hazard due to rotating parts!

Can cause serious injury or death.

- Before starting the engine, ensure that no one is within danger zone of the engine/the machine!
- Start the engine only if the engine cover is closed!

Bleed the fuel system in the following cases:

- After removing and fitting the fuel filter, prefilter or the fuel lines back on again
- After running the fuel tank empty
- After running the engine again, after it has been out of operation for a longer period of time

Bleed the fuel system as follows:

- Fill the fuel tank
- Turn the starting key to the first position
- Wait about 5 minutes while the feed pump bleeds the fuel system automatically
- Starts the engine
- Check for leaks after starting the engine
- Let the fuel system run by performing a test run of 5 minutes at idling speed

If the engine runs smoothly for a while and then stops, or if it does not run smoothly:

- Stop the engine
- Raise the lock lever
- Remove the starting key
- Bleed the fuel system again as described above
- Have this checked by authorized personnel if necessary

Fuel prefilter with water separator

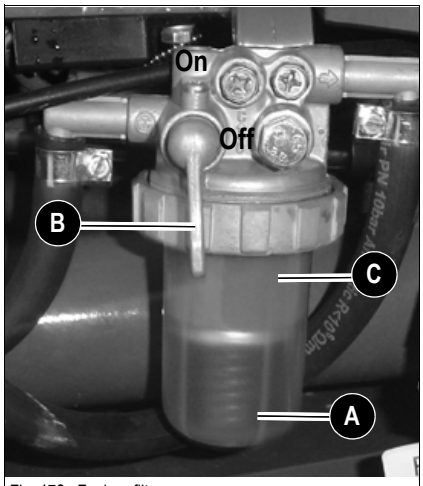

Fig. 172: Fuel prefilter

Interrupt the fuel supply as follows:

☞ *Turn ball-type cock **B** to the **OFF** mark*

➥ Fuel supply is interrupted

☞ *Turn ball-type cock **B** to the **ON** mark*

➥ Fuel supply is open

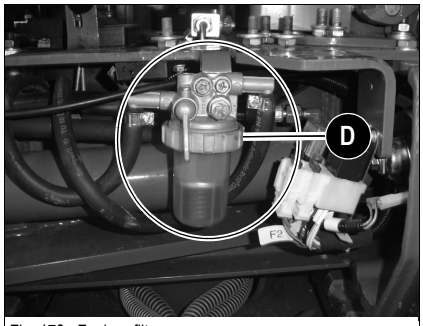

Fig. 173: Fuel prefilter

Check the fuel prefilter as follows:

☞ *If the red indicator ring **A** rises to position **C***

☞ *Unscrew screw connection **D***

☞ *Prepare a suitable container for collecting the fuel/water mixture.*

➥ Fuel/water mixture drains

➥ Wait until the indicator ring returns to the bottom of the water separator

☞ *Screw screw connection **D** back on again*

Environment!

Collect the fuel/water mixture as it drains with a suitable container and dispose of it in an environmentally friendly manner.

5.3 Engine lubrication system

Information!

Check the oil level once a day. We recommend checking it before starting the engine. After stopping a warm engine, wait at least 5 minutes before checking.

NOTICE

In order to avoid engine damage, use the oil quantity and grade specified in the fluids and lubricants table.

- The oil level must be between the MAX and MIN marks.
- Use only the specified engine oil (refill with the same engine oil).
- Have the oil changed only by a HCE service center.

Information!

In order to avoid engine damage, add the engine oil slowly so it can go down without entering the intake system.

Environment!

Use a suitable container to collect the engine oil as it drains and dispose of it in an environmentally friendly manner!

Checking the oil level

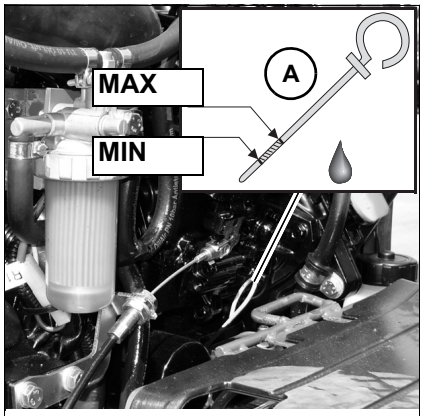

Fig. 174: Checking the oil level

- Park the vehicle on level ground
- Stop the engine
- Raise the lock lever
- Remove the starting key
- Let the engine cool down.
- Opening the engine cover
- Clean the area around the oil dipstick with a lint-free cloth
- Oil dipstick **A**

☞ Pull it out

☞ Wipe it with a lint-free cloth

☞ Push it back in as far as possible

☞ Withdraw it and read off the oil level

- Close and lock the engine cover

Adding engine oil

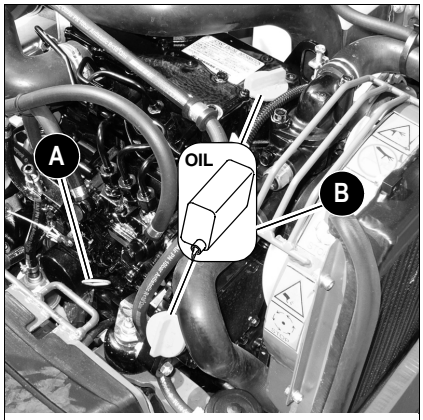

Fig. 175: Oil dipstick and oil filler cap

- Clean the area around oil filler cap **B** with a lint-free cloth
- Open filler cap **B**
- Pull out oil dipstick **A** and wipe it with a lint-free cloth
- Adding engine oil
- Approx. 3 minutes, until the oil has run into the oil sump completely.
- Check the oil level – *see* ***Checking the oil level*** on page 5-7
- Add oil if necessary and check the oil level again
- Close filler cap **B**
- Push oil dipstick **A** back in as far as possible
- Completely remove all oil spills
- Close and lock the engine cover

5.4 Engine cooling system

The radiator is located in the engine compartment, on the right side of the engine, and cools the diesel engine.

The coolant reservoir is also located in the engine compartment, behind the engine

Specific safety instructions

WARNING

Poisoning hazard due to hazardous substances!

Can cause serious injury or death.

- Wear protective equipment.
- Do not inhale or swallow coolant.
- Avoid contact of the coolant or antifreeze with the skin and eyes.

WARNING

Burn hazard due to coolant or antifreeze!

Can cause serious injury or death.

- Only perform maintenance on an engine that has cooled down.
- Do not smoke, avoid fire and open flames. Wear protective equipment.

WARNING

Burn hazard due to hot coolant!

Can cause serious injury or death.

- Wear protective equipment.
- Let the engine cool down.
- Carefully open the radiator cap.

NOTICE

Do not add a different coolant to the one in the reservoir.

- Only use the coolant recommended by HCE
  – see chapter 6.10 ***Coolant compound table*** on page 6-9.

- Dirt on the radiator fins reduces the radiator's heat dissipation capacity!
  To avoid this:
  - ☞ Clean the outside of the radiator at regular intervals. Use oil-free compressed air (2 bar max.) to clean. Maintain a certain distance from the radiator to avoid damage to the radiator fins. Refer to the maintenance plans in the appendix for the cleaning intervals.
  - ☞ In dusty or dirty work conditions, clean more frequently than indicated in the maintenance plans.
- An insufficient coolant level reduces the cooling capacity as well and can cause engine damage! Therefore:
  - ☞ Check the coolant level at regular intervals. Refer to the maintenance plans in the appendix for the intervals
  - ☞ If coolant must be added frequently, check the cooling system for leaks and/or contact a HCE service center!
  - ☞ Never add cold water/coolant if the engine is warm!
- The use of the wrong coolant can destroy the engine and the radiator. Therefore:
  - ☞ Add enough antifreeze compound to the coolant – but never more than 50%. If possible use brand-name antifreeze compounds with anticorrosion additives!
  - ☞ Observe the coolant compound table
    – see chapter 6.10 ***Coolant compound table*** on page 6-9.
  - ☞ Do not use radiator cleaning compounds if an antifreeze compound has been added to the coolant – otherwise this causes sludge to form that can damage the engine.
- Once you have filled the coolant reservoir:
  - ☞ Test run the engine.
  - ☞ Stop the engine.
  - ☞ Raise the lock lever.
  - ☞ Remove the starting key.
  - ☞ Let the engine cool down.
  - ☞ Check the coolant level again.
  - ☞ Close and lock the engine cover

Environment!

Use a suitable container to collect the coolant as it drains and dispose of it in an environmentally friendly manner!

Checking the coolant level/adding coolant

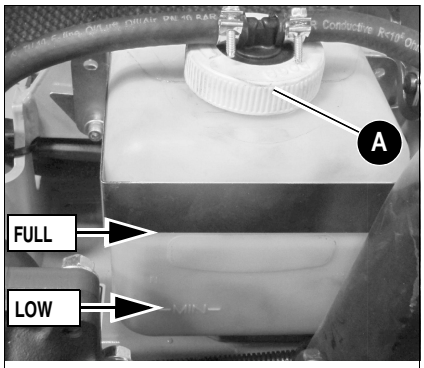

Fig. 176:Coolant reservoir

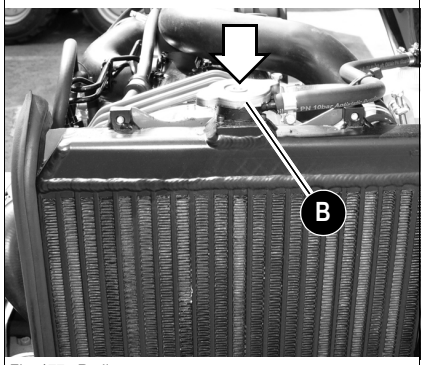

Fig. 177: Radiator

Checking the coolant level

- Park the vehicle on level ground
- Stop the engine
- Raise the lock lever
- Remove the starting key and carry it with you
- Let the engine and the coolant cool down
- Opening the engine cover
- Check the coolant level on the transparent coolant reservoir **A** and on the radiator **B**

☞ If the coolant level is below the **LOW** seam or if there is no coolant at the radiator filler inlet **B**:

➥ Adding coolant

☞ Close and lock the engine cover

Information!

Check the coolant level once a day.
We recommend checking it before starting the engine.

Adding coolant

After the engine has cooled down:

☞ *Release overpressure in the radiator*

☞ Carefully open cap ***B*** to the first notch and fully release the pressure

☞ *Open filler cap **B***

☞ *Add coolant to the lower edge of the filler inlet (radiator)*

☞ *Close filler cap **B***

☞ *Start the engine and let it warm up for about 5 – 10 minutes.*

☞ *Stop the engine*

☞ *Raise the lock lever*

☞ *Remove the starting key and carry it with you*

☞ *Let the engine cool down.*

☞ *Check the coolant level again*

➥ The coolant level must be between the **LOW** and **FULL** tank seams

☞ *If necessary, add coolant and repeat the procedure until the coolant level remains constant*

☞ *Close and lock the engine cover*

Information!

Check the antifreeze every year before the cold season sets in

Cleaning the radiator

Information!

Dirt on the radiator fins reduces the radiator's heat dissipation capacity and can cause damage to the diesel engine!

- Check and if necessary clean the radiator once a day.
- In dusty or dirty work conditions, clean more frequently than indicated in the maintenance plans.

Information!

In order to ensure the radiator's optimal cooling capacity, do not damage the radiator fins as you clean them with a compressed-air gun!

- Maintain a sufficient distance from the radiator to avoid damage to the radiator fins.
- Use oil-free compressed air (2 bar/29 psi max.) to clean.

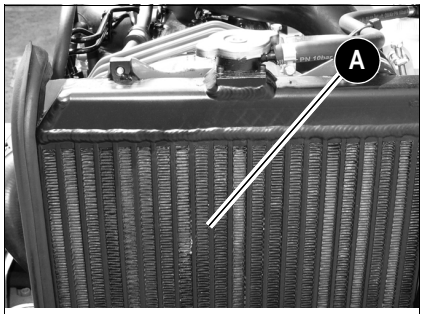

Fig. 178: Cleaning the radiator

Radiator **A** is located on the left-hand side under the engine cover.

1 Stop the machine on firm, level and horizontal ground
2 Position the boom straight ahead at the center of the machine
3 Lower the stabilizer blade to the ground
4 Stop the engine
5 Raise the lock lever
6 Remove the starting key and carry it with you
7 Let the engine and the coolant cool down
8 Opening the engine cover
9 Remove dust and other foreign bodies from the radiator fins with compressed air

5.5 Air filter

NOTICE

The filter elements will be damaged if they are washed or brushed out!
Bear in mind the following to avoid premature engine wear or damage:

- Do not clean the filter elements.
- Replace the air filter element according to the maintenance plan.
- Never reuse damaged filter elements.
- Ensure cleanliness when replacing the filter elements.

NOTICE

Filter elements degrade prematurely when in service in acidic air for longer periods of time. This risk is present for example in acid production facilities, steel and aluminum mills, chemical plants and other nonferrous-metal plants.

- Replace air filter element ***D*** after 50 operating hours at the latest!

Information!

Ensure that dust valve **G** shows downward once it is installed!

Air filter

Replacing air filter elements

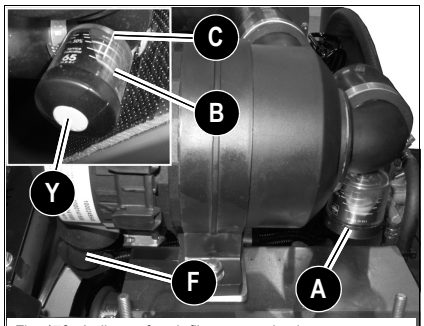

Fig. 179: Indicator for air filter contamination

Replace the air filter elements:

- If the yellow piston **B** in dirt indicator **A** reaches the red service mark **C**.
- Every 1000 operating hours or once a year at the latest.

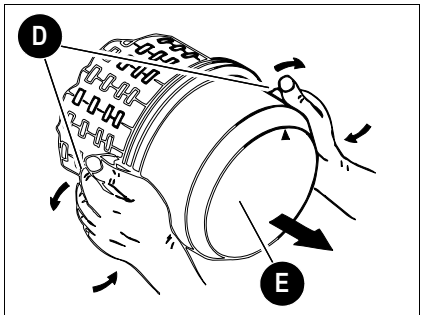

Fig. 180: Lower housing section

1 Park the machine, stop the engine, remove the starting key and carry it with you.
2 Open the engine cover.
3 Remove dirt and dust from the air filter housing and the area around it.
4 Fold bow clips **D** on lower housing section **E** to the outside.
5 Remove lower housing section **E**.

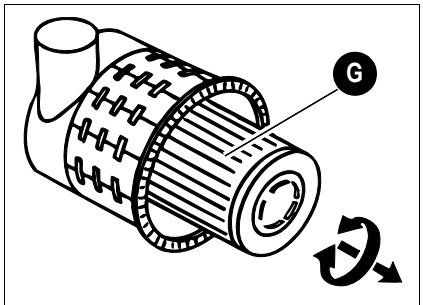

Fig. 181: Outside filter

6 Carefully remove outside filter **G** with slightly turning movements.
7 Ensure that all contamination (dust) inside the upper and lower housing sections (including the dust valve) has been removed.
8 Clean the parts with a clean lint-free cloth, do not use compressed air.

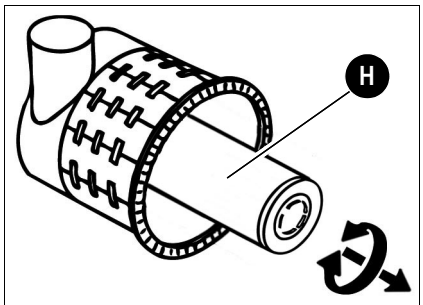

Fig. 182: Inside filter

9 Carefully remove inside filter **H** with slightly turning movements.
10 Check the new inside filter **H** and outside filter **G** for damage and carefully insert them in the air filter housing.
11 Close bow clips **D**.
12 Ensure that dust valve **F** shows downward once it is installed.
13 After replacing the filters, press button **J** to reset the yellow piston **B**.

5.6 V-belt

WARNING

Injury hazard when checking the V-belt tension!

Can cause serious injury or death.

- Stop the engine before performing inspection work in the engine compartment
- Raise the lock lever
- Remove the starting key
- Disconnect the battery
- Let the engine cool down.

NOTICE

Cracked and stretched V-belts cause engine damage

- Have the V-belt replaced by a HCE service center

Check the V-belt once a day, and retension it if necessary.

Retension new V-belts after about 15 minutes of running time.

Checking V-belt tension

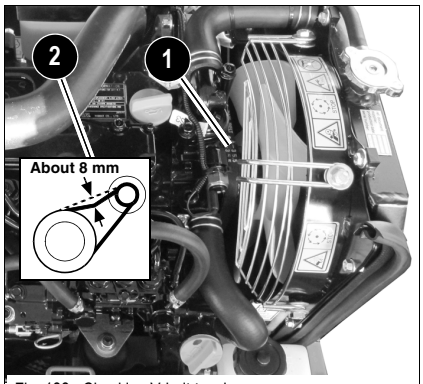

Fig. 183: Checking V-belt tension

☞ Stop the engine

☞ Raise the lock lever

☞ Remove the starting key and carry it with you

☞ Disconnect the battery

☞ Let the engine cool down.

☞ Opening the engine cover

☞ Carefully check V-belt **1** for damage, cracks or cuts

➥ Replace the V-belt if it touches the base of the V-belt groove or if the pulleys are damaged.

☞ Press with your thumb about 100 N (22.5 lbf) to check the deflection of the V-belt between the crankshaft disk and the fan wheel. A new V-belt should have a deflection of 6 to 8 mm (0.24 to 0.31 in), a used V-belt (after about 5 minutes running time) should have a deflection of 7 to 9 mm (0.27 to 0.35 in) (see figure)

☞ Retension the V-belt if necessary

- If the V-belt is damaged:

☞ Have the V-belt replaced by authorized personnel

☞ Close and lock the engine cover

Re-tension the V-belt

May be performed only by a HCE service center.

5.7 Hydraulic system

Important information on the hydraulic system

DANGER

Burn hazard during maintenance on a hot engine and hydraulic system!

Can cause serious injury or death.

- Wait at least 10 minutes after stopping the engine.
- Wear protective equipment.

DANGER

Danger of fluid escaping under high pressure! Removing the filler plug can cause oil to escape.

Can cause serious injury or death.

- Do not operate the machine with leaking or damaged hydraulic system components.
- Wear protective equipment.
- Wear safety glasses to protect the eyes. If oil contacts the eye, flush immediately with clean water and seek medical treatment.

NOTICE

In order to avoid damage to the hydraulic system:

- Use hydraulic oil and grade according to fluids and lubricants table.
- Always add hydraulic oil using the filling screen.
- Check the hydraulic oil level once a day.
- If the hydraulic oil in the sight glass is cloudy, this indicates that water or air has penetrated the hydraulic system. Contact a HCE service center.
- If the hydraulic system is filled with biodegradable oil, then use only biodegradable oil of the same type for filling up – observe the sticker on the hydraulic oil reservoir.
- Contact a HCE service center if the filter of the hydraulic system is dirty.

Checking the hydraulic oil level

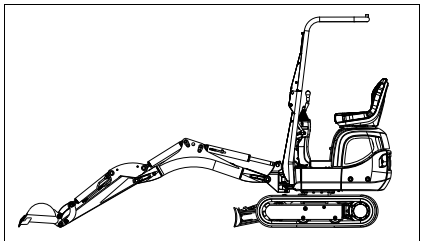

Fig. 184: Parking the machine

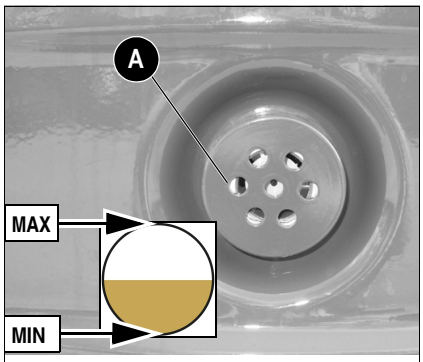

Fig. 185: Oil level indicator on the hydraulic oil reservoir

1 Park the vehicle on firm, level, and horizontal ground.
2 Position the boom straight ahead at the center of the vehicle (see figure).
3 Lower the boom and the stabilizer blade to the ground.
4 Stop the engine.
5 Operate the control lever repeatedly to release the pressure in the hydraulic system.
6 Remove the starting key and carry it with you.
7 Sight glass A is located at the rear of the machine.
8 Check the oil level on sight glass A

➥ The oil level must be at the MIN mark if the machine has not reached its operating temperature yet.

➥ The oil level must be at the MAX mark after the machine reaches its operating temperature.

Add hydraulic oil if the oil level is below these marks.

Adding hydraulic oil

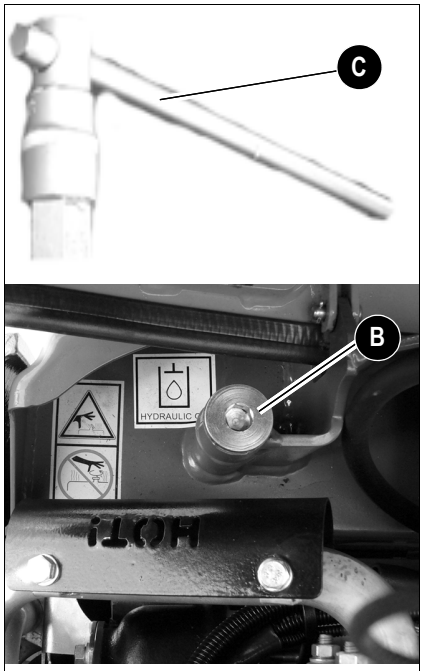

Fig. 186: Hydraulic oil reservoir

9 Slowly open filler cap B with tool C included in the tool kit
10 Add hydraulic oil up to the corresponding mark.
11 Check the hydraulic oil level on sight glass A.
12 Add if necessary and check again.
13 Close filler cap B.

Information!

Use a suitable container to collect fluids and lubricants as they flow out and dispose of them in an environmentally friendly manner.

Important information on the use of biodegradable oil

- Use only the biodegradable hydraulic fluids that have been tested and released by HCE. Always contact a HCE dealer before using other products that have not been recommended. In addition, ask the oil supplier for a written declaration of guarantee. This guarantee is applicable to damage occurring on the hydraulic components that can be proved to be due to the hydraulic fluid.
- Use only biodegradable oil of the same type for adding oil. In order to avoid misunderstandings, a label providing clear information is located on the hydraulic oil reservoir (next to the filler inlet) regarding the type of oil currently used!
  The joint use of two different biodegradable oils can severely affect the quality of one of the oil types. Therefore when using a different kind of biodegradable oil, ensure that the remaining amount of initial biodegradable oil does not exceed the indications of the manufacturer of biodegradable oil.
- Do not add mineral oil – the content of mineral oil should not exceed 2 % by weight in order to avoid foaming problems and to ensure biological degradability.
- When running the machine with biodegradable oil, the same oil and filter replacement intervals are valid as for mineral oil *– see chapter 5.16* ***Maintenance plan (overview)*** on page 5-37.
- Always have the condensation water in the hydraulic oil reservoir drained by a HCE service center before the cold season. The water content may not exceed 0.1% by weight.
- The instructions in this Operator's Manual concerning environmental protection are also valid for the use of biodegradable oil.
- If additional hydraulic attachments are installed or operated, use the same type of biodegradable oil for these attachments to avoid mixtures in the hydraulic system.

Subsequent change from mineral oil to biodegradable oil must be performed by a HCE service center or your HCE dealer.

Checking hydraulic pressure lines

Specific safety instructions

WARNING

Injury hazard when checking hydraulic pressure lines!

Can cause serious injury or death.

- Wear protective gloves and safety glasses.
- Search for hydraulic leaks with a piece of paper, for example.
- Always consult a doctor immediately, even if the wound seems insignificant. Hydraulic oil causes blood poisoning.
- Observe the following instructions:
  - Retighten leaking screw connections and hose connections only when the system is not under pressure. In other words, release the pressure before working on pressurized lines!
  - Never weld or solder damaged or leaking pressure lines and screw connections. Replace damaged parts (or have them replaced) with new ones
  - Never use an unprotected light or open flame to check for minor leaks!
  - Have damaged flexible lines replaced by a HCE service center only!
  - Do not remove protective hoses from hydraulic hoses.

- Leaks and damaged pressure lines must be immediately repaired or replaced by a HCE service center or after-sales personnel. This not only increases the operating safety of the machine but also helps to protect the environment.
- Replace hydraulic hoses every 6 years from the date of manufacture, even if they do not seem to be damaged.

In this respect, we recommend that you observe all the relevant safety regulations for hydraulic lines, as well as the safety regulations regarding accident prevention and occupational health and safety in your country. Also observe DIN 20066, part TI. 5.

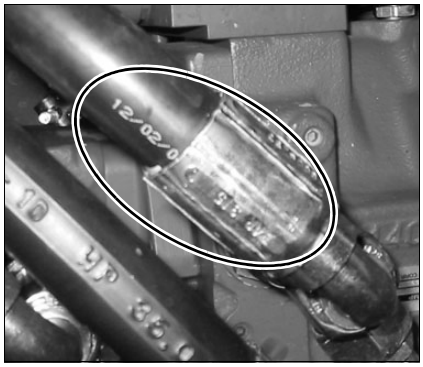

The article number is marked on the clamping section, and the date of manufacture is indicated on the hose of each hose connection.

5.8 Overview of lubrication points

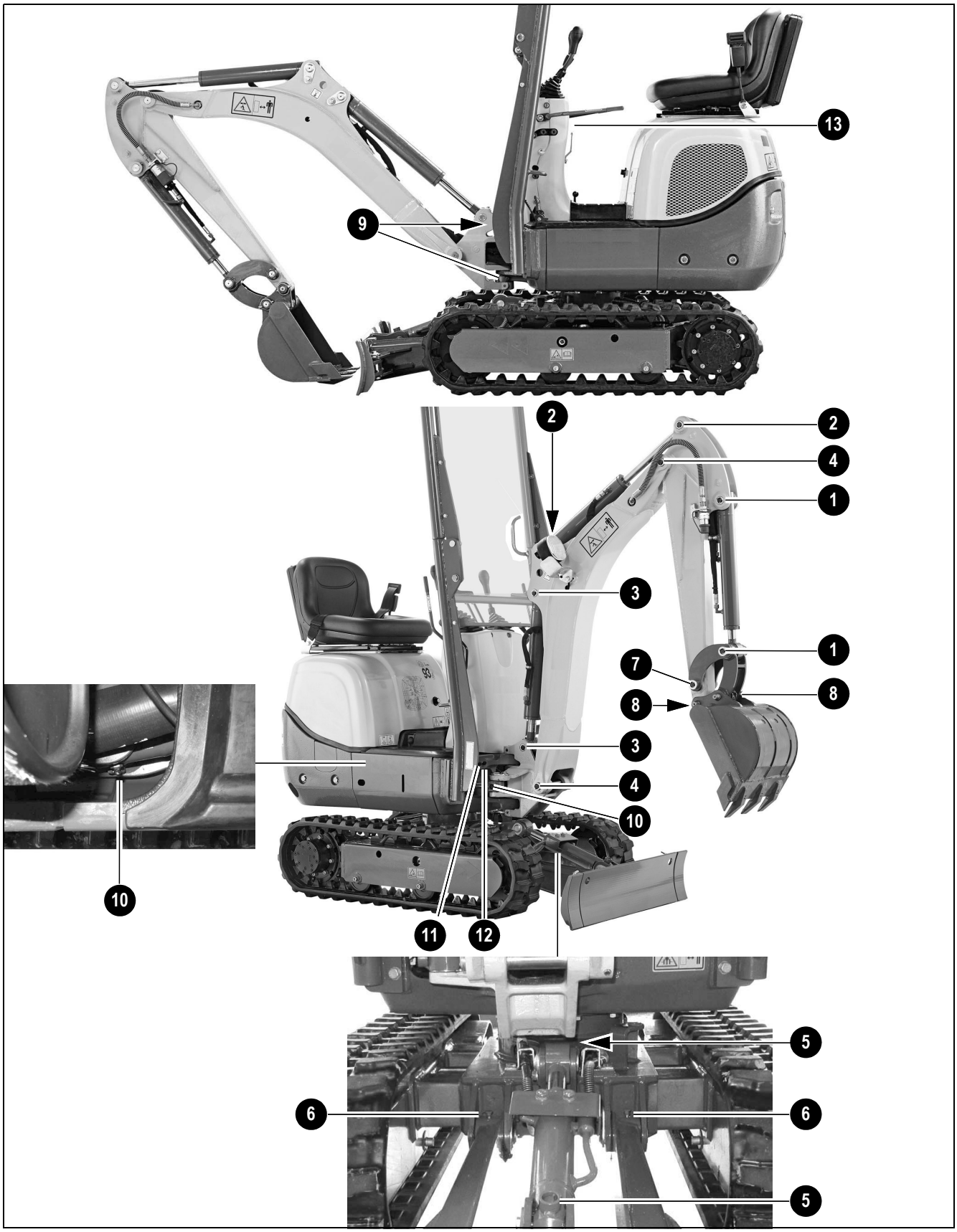

Item	Lubrication point[1]	Quantity
1	Bucket cylinder	2
2	Stick cylinder	2
3	Boom cylinder	2
4	Boom	2
5	Stabilizer blade cylinder	2
6	Stabilizer blade	2
7	Shovel arm	1
8	Bucket	2
9	Swiveling console	2
10	Swiveling cylinder	2
11	Live ring (ball bearing) *– see chapter* ***Lubricating the live ring (ball bearing)*** on page 5-21	1
12	Teeth of live ring *– see chapter* ***Lubricating the teeth of the live ring*** on page 5-22	1
13	Ball sockets (ISO/SAE changeover option)	2

1. Lubrication on the pins or directly on the cylinders

Information!

Keep the lubrication points clean and remove ejected grease.

Parking the machine

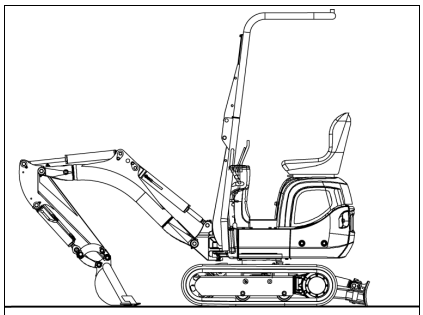

Fig. 187: Parking the excavator

☞ Park the machine on level and horizontal ground.
☞ Lower the boom and the attachment to the ground.
☞ Lower the stabilizer blade to the ground.
☞ Stop the engine.
☞ Remove the starting key and carry it with you.
☞ Move joysticks **15** and **16** in all directions repeatedly.
☞ Raise the lock lever.
☞ Get off the machine, lock the engine cover.

Swiveling cylinder lubrication points

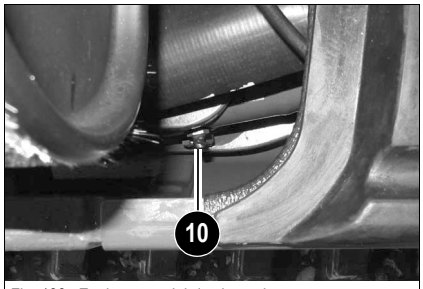

Fig. 188: Engine cover lubrication point

☞ Stop and park the vehicle.
☞ Open the engine cover.
☞ The lubrication point is located on the right under the engine cover.
☞ Apply grease to lubrication point **10** with a grease gun.
☞ Remove ejected grease.

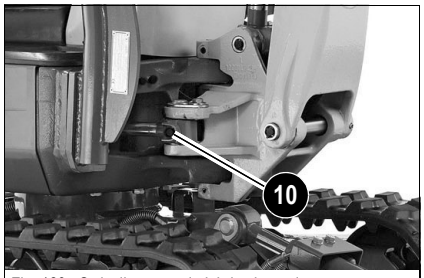

Fig. 189: Swiveling console lubrication point

☞ A further lubrication point is located on the right on the swiveling console.

☞ Apply grease to lubrication point **10** with a grease gun.

☞ Remove ejected grease.

Lubricating the live ring (ball bearing)

DANGER

Crushing hazard! Do not rotate the upper carriage during lubrication.

Serious crushing hazard causing death or serious injury.

- Stop and park the machine – *see chapter* ***Parking the machine*** on page 5-20.
- Do not rotate the upper carriage.

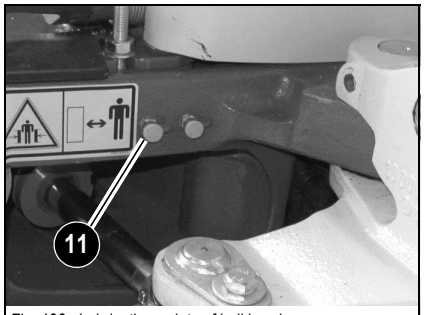

Fig. 190: Lubrication points of ball bearing race

1 Park the vehicle on firm, level, and horizontal ground.

2 Lower the boom and the stabilizer blade to the ground.

3 Stop the engine, remove the starting key and carry it with you.

4 Raise the lock lever.

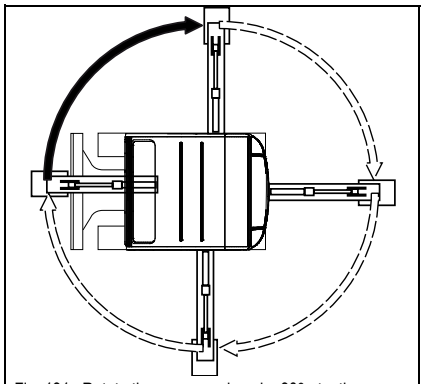
Fig. 191: Rotate the upper carriage by 90° at a time

5 Apply grease to lubrication point **11** with one stroke of the grease gun.

6 Start the engine, raise the boom and the stabilizer blade.

7 Rotate the upper carriage by 90°.

8 Repeat steps 2 – 7 three times until the upper carriage is back in its initial position.

9 Rotate the upper carriage several times by 360°.

Lubricating the teeth of the live ring

DANGER

Crushing hazard! Do not rotate the upper carriage during lubrication.

Serious crushing hazard causing death or serious injury.

- Stop and park the machine – *see chapter* ***Parking the machine*** on page 5-20.
- Do not rotate the upper carriage.

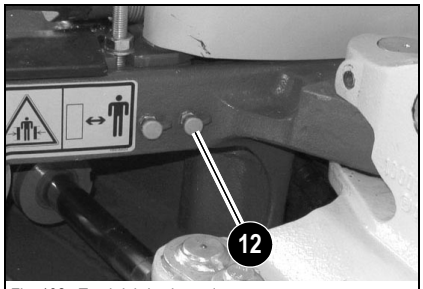

Fig. 192: Teeth lubrication point

1 Park the vehicle on firm, level, and horizontal ground.
2 Lower the boom and the stabilizer blade to the ground.
3 Stop the engine, remove the starting key and carry it with you.
4 Raise the lock lever.

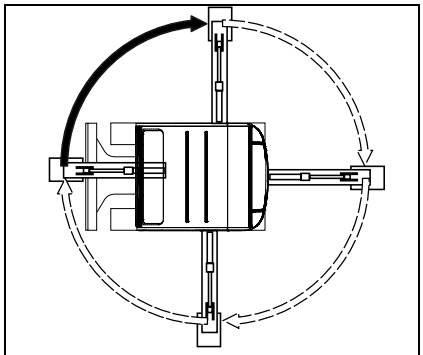

Fig. 193: Rotate the upper carriage by 90° at a time

5 Apply grease to lubrication point **12** with five strokes of the grease gun.
6 Start the engine, raise the boom and the stabilizer blade.
7 Rotate the upper carriage by 90°.
8 Repeat steps 2 – 7 three times until the upper carriage is back in its initial position.
9 Rotate the upper carriage several times by 360°.

Ball sockets (ISO/SAE changeover option)

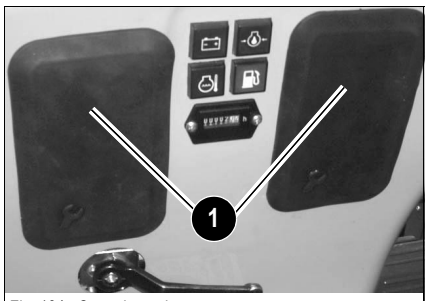

Fig. 194: Control stand covers

☞ Stop and park the vehicle.

☞ Raise covers **1**.

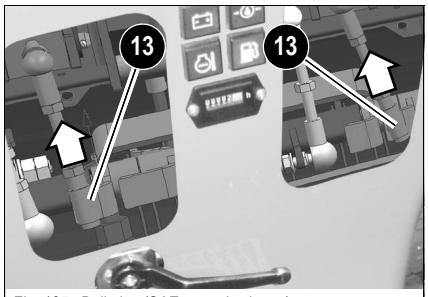

Fig. 195: Ball pins (SAE controls shown)

☞ Slide the knurled sleeve **13** upward, and hold, unhitch and grease it.
The sleeve is safely locked if it is firmly connected with the ball pin and if it is engaged in the lower position.

☞ Lower covers **1**.

5.9 Tracks

Track wear can vary according to work and ground conditions.

Checking track tension

DANGER

Crushing hazard during work under the vehicle!

Causes serious injury or death.

- Ensure that no one is in the danger zone!
- Support the machine so as to allow the tracks to sag freely.

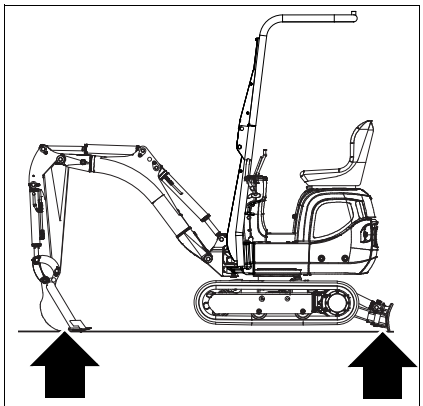

Fig. 196: Raising the machine

1 Park the vehicle on firm, level, and horizontal ground.

2 Raise the vehicle evenly and horizontally by means of the boom and stabilizer blade.

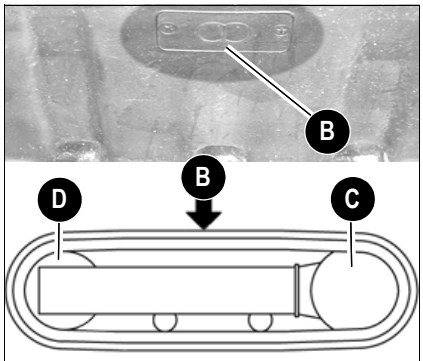

Fig. 197: Rubber track mark

3 Place the tracks so that mark **B** is in the middle between the drive pinion **C** and the track tension roller **D**.

4 Stop the engine.

5 Raise the control lever base.

6 Remove the starting key and carry it with you.

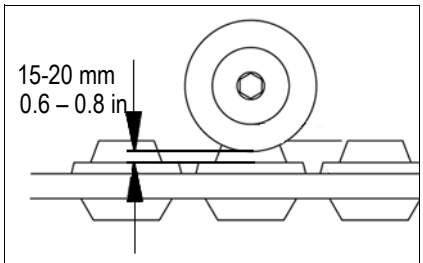

Fig. 198: Measuring distance

7 Adjust the correct track tension if the play between the track roller and the track is not 15 – 20 mm (0.6 – 0.8 in).

Tightening the tracks

WARNING

Injury hazard due to grease escaping under pressure!

Can cause serious injury or death.

- Wear protective gloves and safety glasses.
- Open the lubricating valve only very carefully and do not unscrew it more than a revolution.
- Loosen no other component except the lubricating valve.
- Keep your face away from the lubricating valve connection.
- Release grease only as described below.

NOTICE

Excessive tension of the tracks causes serious damage to the cylinder and the track.

- Tighten the tracks only up to the prescribed measuring distance

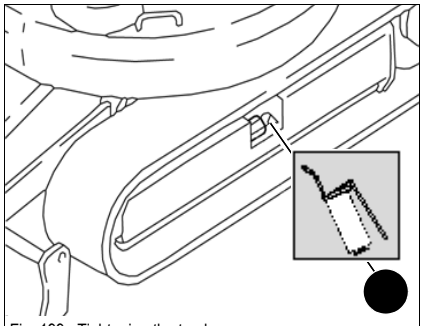

Fig. 199: Tightening the tracks

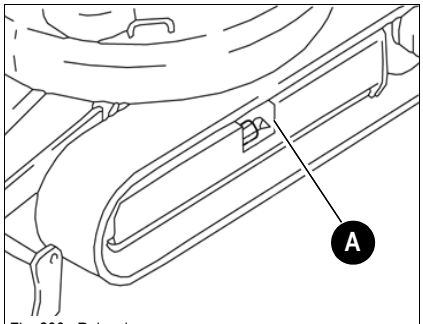

Fig. 200: Releasing grease

Tightening the tracks

☞ Inject grease with a grease gun through lubricating valve A

☞ Check the tension is correct by lowering the machine to the ground, starting the engine, letting it run at idling speed without any load and slowly moving the machine forward and reverse and switching it off again. Raise machine again with the boom.

☞ Check the tension of the tracks again.

➥ If it is not correct:

☞ Adjust again.

☞ Should the tracks still be slack after injecting more grease, replace the tracks or the seals in the cylinders. Contact a HCE dealer in this case.

Reducing tension

☞ Place a suitable container underneath to collect the grease.

☞ Slowly turn lubricating valve B one revolution anticlockwise to release the grease.

☞ Retighten lubricating valve B

➥ The grease flows out of the groove of the lubricating valve.

☞ Check the tension is correct by lowering the machine to the ground, starting the engine, letting it run at idling speed without any load and slowly moving the machine forward and reverse and switching it off again. Raise the machine again with the boom.

Environment!

Use a suitable container to collect the grease and dispose of it in an environmentally friendly manner.

5.10 Traveling drive

Information!

The traveling drive is designed as a **maintenance-free gerotor motor**. The hydraulic oil that flows through it lubricates and cools all moving components, therefore an oil change is not necessary.

5.11 Electrical system

Specific safety instructions

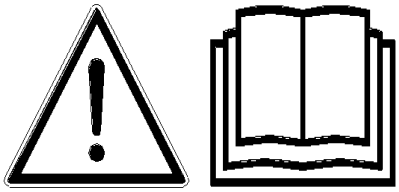

- Use only 12 V power sources. Higher voltages will damage the electrical components.
- When connecting the battery leads, ensure that the poles +/− are not inverted, otherwise sensitive electrical components will be damaged.
- Do not interrupt voltage-carrying circuits at the battery terminals – sparking hazard!
- Never place tools or other conductive articles on the battery – risk of short circuit!
- Disconnect the negative (**–**) battery terminal from the battery before starting repair work on the electrical system.
- Dispose of used batteries properly.

Servicing and maintenance at regular intervals

Before performing machine travel

☞ *Check every time before performing machine travel:*

- Is the light system OK?
- Do the lights and the acoustic warning system work?

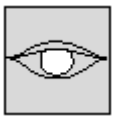

Every week

☞ *Check once a week:*

- Electric fuses
  – *see chapter* ***Fuses behind the right-hand trim*** on page 6-4
- Cable and grounding connections
- Battery charge condition – *see* ***Battery*** on page 5-29
- Condition of battery terminals

Instructions concerning specific components

Cables, lamps and fuses

Always observe the following instructions:

- Malfunctioning components of the electrical system must always be replaced by a HCE service center. Lamps and fuses may be replaced by unqualified persons.
  .• When performing maintenance on the electrical system, pay particular attention to ensuring good contact in leads and fuses.
  - Blown fuses indicate overloading or short circuits. The electrical system must therefore be checked before installing a new fuse.
  - Only use fuses with the specified load capacity (amperage)
    – see chapter Fuses behind the right-hand trim on page 6-4

Alternator

Observe the following instructions:

- Start the engine only if the battery is connected
- When connecting the battery, ensure that the poles (+/−) are not inverted
- Always disconnect the battery before performing welding work or connecting a quick battery charger!
- Have malfunctioning charge indicator lights immediately replaced – see chapter Indicator light (red) – alternator charge function on page 3-8

Battery

WARNING

Battery acid is highly caustic!

Caustic injury hazard due to battery acid!

Can cause serious injury or death.

- Always wear safety glasses and protective clothing with long sleeves.

If acid is spilled:

- Thoroughly rinse all affected surfaces immediately with plenty of water.
- Thoroughly wash any part of the body touched by the acid immediately with plenty of water and seek medical attention at once!

WARNING

Injury hazard due to malfunctioning batteries!

Can cause serious injury or death.

- The battery contains sulfuric acid! This acid must not be allowed to come into contact with the skin, the eyes, clothing or the machine.
- Do not use open flames near open battery cells, avoid sparks close by and do not smoke – otherwise the gas that is also produced during normal battery operation (not only during battery charging) could ignite!
- Do not attempt to jump-start the machine if the battery is frozen or if the acid level is low. The battery can burst or explode!
  - Replace the battery immediately!
- Always disconnect the negative terminal (–) from the battery before starting repair work on the electrical system!

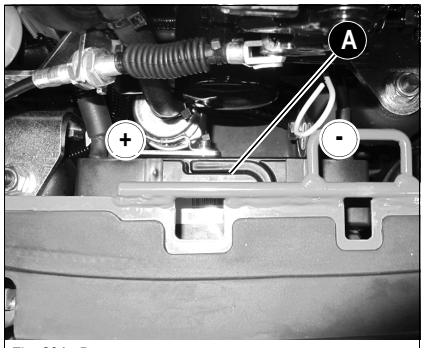

Fig. 201: Battery

Battery **A** is located under the floor panel directly in front of the control stand. The battery is “maintenance-free”. However check the battery at regular intervals to ensure that the electrolyte level is between the MIN and MAX marks.

Checking the battery requires it to be removed and must be performed by a HCE service center.

Always follow the specific battery safety instructions!

Information!

Do not disconnect the battery while the engine is running!

5.12 General maintenance

Cleaning

Cleaning the machine is divided into 2 separate areas:

- Exterior of the vehicle
- Engine compartment

The wrong choice of cleaning equipment and agents can impair the operating safety of the vehicle on the one hand, and on the other undermine the health of the persons in charge of cleaning the vehicle. It is therefore essential to observe the following instructions.

General instructions for all areas of the vehicle

Cleaning with washing solvents

- Ensure sufficient room ventilation
- Wear suitable protective clothing
- Do not use flammable liquids, such as gasoline or diesel

Cleaning with compressed air

- Work carefully
- Wear safety glasses and protective clothing
- Do not aim the compressed air at the skin or at other people
- Do not use compressed air for cleaning your clothing

Cleaning with a high-pressure cleaner or steam jet

- Electrical components and damping material must be covered and not directly exposed to the jet
- Cover the hydraulic oil reservoir and the covers of the fuel tank, the hydraulic oil reservoir, etc.
- Protect the following components from moisture:
  - Engine
  - Electrical components such as the alternator, etc.
  - Control devices and seals
  - Air intake filters, etc.

Cleaning with volatile and easily flammable anti-corrosion agents and sprays:

- Ensure sufficient room ventilation
- Do not use unprotected lights or open flames
- Do not smoke

Control stand

NOTICE
Never use high-pressure cleaners, steam jets or high-pressure water to clean the control stand. Water under high pressure can
• penetrate into the electrical system and cause short circuits and
• damage seals and disable the controls!

We recommend using the following aids to clean the control stand:
- Damp cloth
- Brush
- Water with mild soap solution

Cleaning the seat belt:
- Clean the seat belt (which remains fitted in the machine) with a mild soap solution only. Do not use chemical agents as they can destroy the fabric!

On the outside of the vehicle

The following articles are generally suitable:
- High-pressure cleaner
- Steam jet

Engine compartment

WARNING

Burn hazard due to hot engine parts!

Can cause serious injury or death!
- Stop the engine and let it cool down.
- Wear protective equipment.

WARNING

Injury hazard due to rotating parts!

Can cause serious injury or death!
- Stop the engine before cleaning it

NOTICE
When cleaning the engine with a water or steam jet
- The engine must be cold
- and do not point the jet directly at electric sensors such as the oil pressure switch.

The humidity penetrating any such sensors causes them to fail and possibly leads to engine damage!

Threaded fittings and attachments

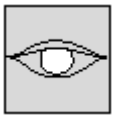

All threaded fittings must be checked regularly for tightness, even if they are not listed in the maintenance plans. This applies in particular to:

☞ Engine fastening screws

☞ Fastening screws on the hydraulic system

☞ Bucket teeth and pin fastenings on the attachment

☞ Rollbar fastening screws

Retighten loose connections immediately. Contact a HCE service center if necessary.

Pivots and hinges

All mechanical pivot points on the machine (for example door hinges, joints) and fittings (for example door arresters) must be lubricated regularly, even if they are not listed in the lubrication schedule.

5.13 Preparatory work before taking out of service

The measures indicated below refer to putting the machine out of operation for 30 days or longer.

- – see chapter 2.7 Safety instructions for maintenance on page 2-12
- Store the machine indoors if possible.
- If the machine is stored outdoors, place it on a wooden base and cover it with a watertight tarp to protect it against humidity.
- Check whether oil or other fluids leak from the machine.
- Lower the boom and the stabilizer blade to the ground.
- Clean the engine with a high-pressure cleaner in a suitable place.
  Observe the following chapter – see chapter Cleaning with a high-pressure cleaner or steam jet on page 5-30.
- Carefully clean and dry the entire machine.
- Spray an anti-corrosion agent onto bare metal parts of the machine (for example on the piston rods of hydraulic cylinders).
- Apply grease to all lubrication points.
- Change engine oil.
- Check the oil levels in all units and add oil if necessary.
- Check the hydraulic oil level and if necessary, add oil.
- Fill up the fuel tank to the maximum level.
- Check the coolant, change as required.
- Remove the grounding strap from the battery, or remove the battery and store it in a safe place. Charge the battery and perform battery maintenance at regular intervals.
- Close the exhaust pipe and the air intake opening of the air filter system.

5.14 Maintenance when out of service for a longer period of time

The following measures must be taken if the machine is out of service for more than 30 days.

Putting into operation again

- Remove anti-corrosion agent from the piston rods.
- Charge, install, and connect the battery.
- Remove the seals from the exhaust pipe and the air filter intake.
- Check the condition of the air filter element and replace the element if necessary.
- Check the dust valve.
- Refuel.
- Switch on the fuel prefilter on the upper carriage and the fuel filter on the engine (turn to ON).
- Turn the starter to position 1 for 2 minutes (to supply the engine with fuel).
- If the machine was out of service for over 6 months, change the oil in the gearbox, engine, etc. and the hydraulic oil reservoir.
- Check the engine oil.
- Also replace hydraulic oil filters (return and breather filters) if the machine has been out of service for over 6 months.
- Lubricate the machine according to the lubrication plan.
- Check the levels.
- Check the coolant, change as required.
- Remove the starting key, remove fuse F2 on the right-hand cover.
- Let the engine run 15 seconds.
- Wait 15 seconds.
- Let the engine run 1 minute again.
- Remove the starting key, put fuse F2 back in.
- Start the diesel engine.
- Let the engine run at idling speed at least 15 minutes without load.
- Check the oil levels in all units and add oil if necessary.

5.15 Fluids and lubricants

Component/application	Fluid/lubricant	Specification	Season/temperature	Capacities[1]
Diesel engine	Engine oil	API: CG-4/CH-4/CI-4 ACEA: E3, E4, E5	-15°C (-5°F) +45°C (+104°F)	2.5 l (0.66 gal)
		ACEA E3, E4, E5 (SAE10 W 40)[2]		
Hydraulic oil reservoir	Hydraulic oil	HVLP 46[3]	Year-round[4]	13.8 ltr. (3.6 gal)
	Biodegradable oil[5]	PANOLIN HLP Synth 46[6]		
		BP BIOHYD SE-S 46[6]		
Grease	Roller and friction bearings	KPF 2 K-20[7] ISO-L-X-BCEB 2[8]	Year-round	As required
	Live ring gears			
	Live ring (ball bearing race)			
	Grease nipples			
Battery terminals	Acid-proof grease[9]	FINA Marson L2	Year-round	As required
Fuel tank[10]	Diesel fuel[11]	ASTM D975-94: 1D, 2D (USA)	Depending on outside temperatures Summer or winter diesel fuel	7 ltr. (1.85 gal)
		EN 590 (EU)		
		ISO 8217 DMX (International)		
		BS 2869-A1, A2 (GB)		
		JIS K2204 (Japan)		
		KSM-2610 (Korea)		
		GB252 (China)		
	Biodiesel	EN 14214		
		ASTM D-6751		
Radiator	Coolant	Distilled water + antifreeze ASTM 6210 (violet)	Year-round	2.9 l (0.76 gal)

1. The capacities indicated are approximate values; the oil level check alone is relevant for the correct oil level
   Capacities indicated are no system fills
2. According to DIN 51511
3. According to DIN 51524 section 3
4. Depending on local conditions – see Hydraulics oil grade on page 5-36
5. Biodegradable hydraulic oil based on saturated synthetic esters with an iodine value of < 10, according to DIN 51524, section 3, HVLP, HEES.
6. Dual Power option: During operation with the electro-hydraulic power unit HPU, there must be no biodegradable hydraulic oil in the excavator or the power unit. Both must be filled with HVLP 46. Contact a HCE service center before using power units from other manufacturers.
7. KPF 2 K-20 according to DIN 51502 multipurpose lithium grease.
8. ISO-L-X-BCEB 2 according to DIN ISO 6743-9.
9. Standard acid-proof grease
10. Sulfur content below 0.05%, cetane number over 45
11. In countries where level 3A/Tier IV exhaust emission regulations apply provisionally, use diesel fuels with a sulfur content of < 15 ppm.

Oil grades for the diesel engine, depending on temperature

Engine oil grade	Ambient temperature (°C)													
	°C	-20	-15	-10	-5	0	5	10	15	20	25	30	35	40
		SAE 10W												
				SAE 20W										
		SAE 10W-30												
API: CG-4/CH-4/ CI-4 ACEA: E3, E4, E5		SAE 10W-40												
			SAE 15W-40											
						SAE 20								
								SAE 30						
										SAE 40				
	°F	-4	5	14	23	32	41	50	59	68	77	86	95	104

Oil change and filter replacement (hydraulics)

NOTICE

An additional oil change and filter replacement can be required depending on how the machine is used. Failure to observe these replacement intervals can cause damage to hydraulic components.

- Observe the following intervals

Application		Hydraulic oil	Hydraulic oil filter insert
Normal work (excavation work)		Replace the first time after 500 o/h, then every 1000 o/h	Replace the first time after 50 o/h, then every 500 o/h
Percentage of hammer work	20%	Every 800 o/h	300 o/h
	40%	Every 400 o/h	
	60%	Every 300 o/h	100 o/h
	Over 80%	Every 200 o/h	

Information!

Please refer to the maintenance plan on page 5-37 for additional maintenance work.

Oil grades for the hydraulic system, depending on temperature

Hydraulics oil grade	Ambient temperature														
	°C	-20	-15	-10	-5	0	5	10	15	20	25	30	35	40	50
HVLP[1]	ISO VG32														
	ISO VG46														
	ISO VG68														
	°F	-4	5	14	23	32	41	50	59	68	77	86	95	104	122

1. According to DIN 51524 section 3

5.16 Maintenance plan (overview)

Work description

For servicing and maintenance on the attachment, please refer to the operation and maintenance manual of the attachment manufacturer.

	Maintenance plan/operating hours (o/h)							
	Maintenance work (daily)	Every 50 o/h	Every 250 o/h	every 500 hours	Every 1000 o/h once a year	Every 2000 o/h	Customer	Authorized service center
Fluid and filter changes ( ):								
Perform the following oil and filter changes (check oil levels after test run):								
• Engine oil[1]		●	●					●
• Engine oil filter[2]		●	●					●
• Fuel filter[3]		●		●				●
• Water separator					●			●
• Coolant					●			●
• Hydraulic oil filter insert[4]		●		●				●
• Hydraulic oil[5]				●	●			●
• Drain condensation water from the hydraulic oil reservoir				●				●
• Air filter element according to dirt indicator[6]					●		●	
Inspection work ( ):								
Check the following material. Refill if necessary:								
• Engine oil	●						●	
• Engine coolant	●						●	
• Fuel	●						●	
• Hydraulic oil	●						●	

5.16 Maintenance plan (overview)

Work description

For servicing and maintenance on the attachment, please refer to the operation and maintenance manual of the attachment manufacturer.

Work description	Maintenance plan/operating hours (o/h)							
	Maintenance work (daily)	Every 50 o/h	Every 250 o/h	every 500 hours	Every 1000 o/h once a year	Every 2000 o/h	Customer	Authorized service center
Check the function of the pedals, they must flip back automatically • Clean, lubricate or repair the pedals, check the torsion springs	●						●	
Clean water ducts[7]					●			●
Check radiator for engine and hydraulic oil for dirt. Clean if necessary	●						●	
Check cooling systems and hoses for leaks and pressure (visual check)	●						●	
Air filter (damage)	●						●	
Remove dust from dust valve	●						●	
Prefilter with water separator: drain water	●						●	
• Cleaning			●				●	
Check V-belt condition and tension	●						●	
Replacing the V-belt				●				●
Check the exhaust system for damage and condition	●						●	
Check the rollbar for damage	●						●	
Check valve clearance. Adjust if necessary					●			●
Clean and adjust the fuel injection pump[8]					●			●
Check and adjust the injection pressure of the injection nozzles, clean the injection needles/nozzles					●			●
Check and adjust injection time[9]					●			●
Empty the fuel tank and check for dirt				●				●
Check battery electrolyte. Add distilled water if necessary		●		●			●	

5.16 Maintenance plan (overview)

Work description

For servicing and maintenance on the attachment, please refer to the operation and maintenance manual of the attachment manufacturer.

	Maintenance plan/operating hours (o/h)							
	Maintenance work (daily)	Every 50 o/h	Every 250 o/h	every 500 hours	Every 1000 o/h once a year	Every 2000 o/h	Customer	Authorized service center
Check battery degassing hose					●			●
Check alternator, starter and electric connections, bearing play and function				●				●
Check preheating system and electric connections				●				●
Pressure check of primary pressure limiting valves[10]		●		●				●
Check tracks for cracks and cuts	●						●	
Check the track tension and retention the tracks if necessary	●						●	
Check bearing play of tread rollers, track carrier rollers, front idlers				●				●
Check piston rods for damage	●						●	
Check the threaded fittings of the safety devices (for example rollbar, etc.) for tightness	●						●	
Check the threaded fittings for tightness				●				●
Check pin lock	●						●	
Check line fixtures	●						●	
Check indicator lights for correct function	●						●	
Couplings, dirt pile-up on hydraulic system dust caps	●						●	
Check insulating mats in engine compartment for damage/condition		●					●	
Check labels and Operator's Manual for completeness and condition		●					●	
Lights and acoustic warning system[11]		●					●	
Check lubricant on live ring[12]		●		●				●
Check gearing of swivel unit pinion					●			●
Lubrication service ( ):								

5.16 Maintenance plan (overview)

Work description

For servicing and maintenance on the attachment, please refer to the operation and maintenance manual of the attachment manufacturer.

	Maintenance plan/operating hours (o/h)							
	Maintenance work (daily)	Every 50 o/h	Every 250 o/h	every 500 hours	Every 1000 o/h once a year	Every 2000 o/h	Customer	Authorized service center
Lubricate the following assemblies/components – *see Maintenance label* on page 5-43:								
• Stabilizer blade	●						●	
• Swiveling console	●						●	
• Swiveling cylinder	●						●	
• Boom	●						●	
• Shovel arm	●						●	
• Attachments	●						●	
• Teeth of live ring					●		●	
• Live ring (ball bearing)	●						●	
• Ball sockets (ISO/SAE changeover option)			●				●	
Functional check ( ):								
Check the function of the following assemblies/components. Rectify if necessary:								
• Lights and acoustic warning system	●						●	
• Check pedal function	●						●	
Leakage check ( ):								
Check for tightness, leaks and chafing: pipes, flexible lines and screw connections of the following assemblies and components. Repair if necessary:								
• Visual check	●						●	
☞ Engine, hydraulic system and hydraulic components	●						●	
☞ Cooling circuit	●						●	

5.16 Maintenance plan (overview)

Work description

For servicing and maintenance on the attachment, please refer to the operation and maintenance manual of the attachment manufacturer.

	Maintenance plan/operating hours (o/h)							
	Maintenance work (daily)	Every 50 o/h	Every 250 o/h	every 500 hours	Every 1000 o/h once a year	Every 2000 o/h	Customer	Authorized service center
☞ Travel drive	●						●	

1. Drain engine oil the first time after 50 o/h, then every 250 o/h
2. Replace the engine oil filter the first time after 50 o/h, then every 250 o/h
3. Replace the fuel filter the first time after 50 o/h, then every 500 o/h
4. Replace the hydraulic oil filter insert the first time after 50 o/h, then every 500 o/h
5. Replace the hydraulic oil the first time after 500 o/h, after 1000 o/h the second time, then every 1000 o/h
6. According to the dirt indicator, every 1000 o/h or once a year at the latest. (Replace after 50 o/h when in extensive use in environments with acidic air, such as acid production facilities, steel and aluminum mills, chemical plants and other nonferrous-metal plants)
7. Clean the water ducts every other 1000 o/h servicing
8. Clean and adjust the fuel injection pump every other 1000 o/h servicing
9. Check and adjust injection time every other 1000 o/h servicing
10. Check the first time after 50 o/h, then every 500 o/h
11. Check once a week
12. Check the first time after 50 o/h, then every 500 o/h

5.17 Maintenance label

Explanation of symbols on the maintenance label

Symbol	Assembly	Explanation
	General	Visual check
	General	Grease instructions
	fuel system	Drain condensation water
	fuel system	Replace the fuel filter, clean the fuel prefilter
	Radiator	Check the coolant level
	Radiator	Drain and add new coolant
	Engine	Check valve clearance. Adjust if necessary
	Engine	Check the engine oil level
	Engine	Change the engine oil
	Engine	Replace the oil filter
	Engine	Check the V-belt tension
	Hydraulic system	Check oil level
	Hydraulic system	Replace the hydraulic oil
	Hydraulic system	Replace the hydraulic oil filter
	Chassis	Check track tension
	Radiator fins	Cleaning

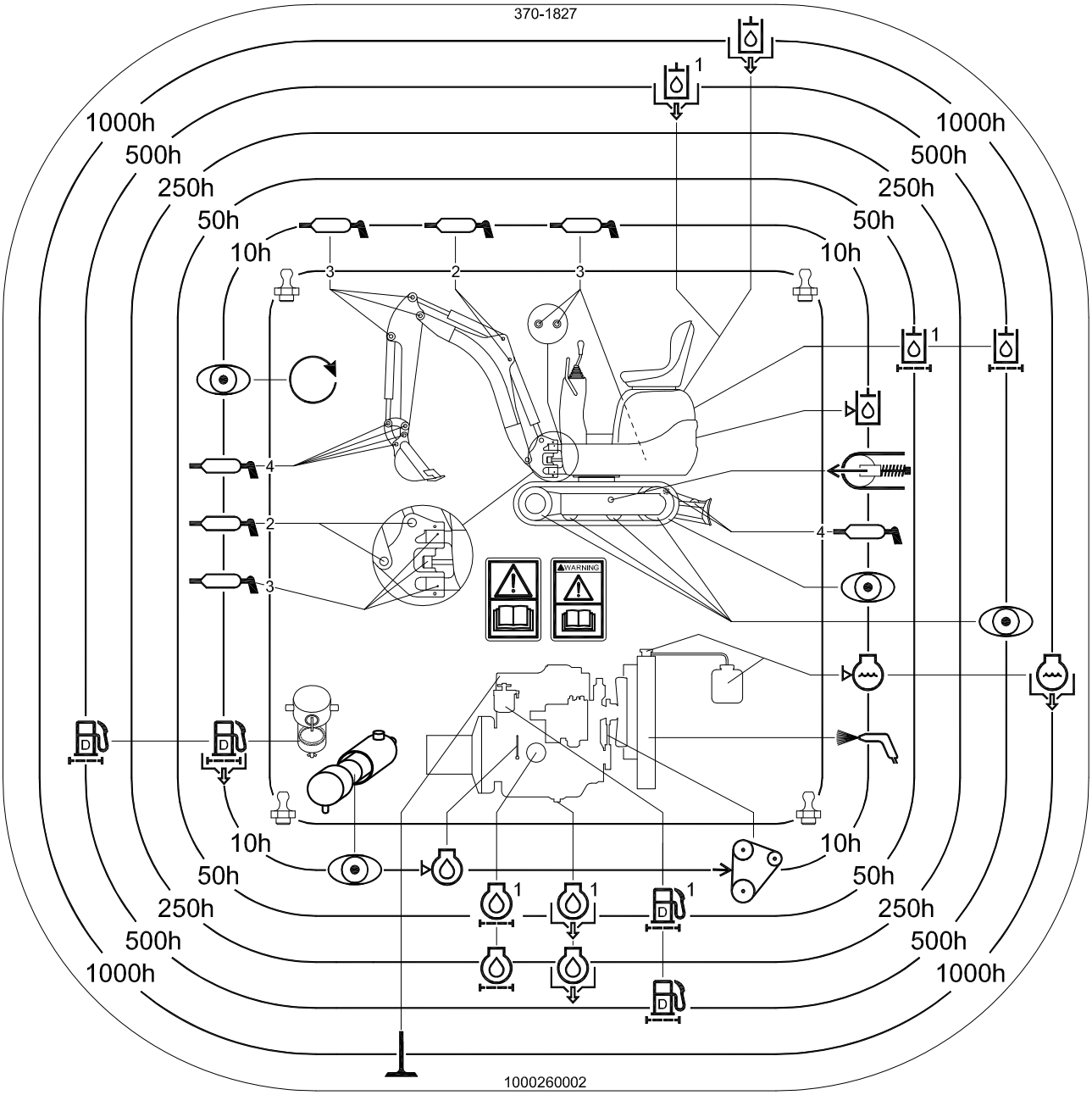
370-1827
1000h
500h
250h
50h
10h
1
2
3
4
WARNING
D
1000260002

6 Technical data

6.1 Chassis

Sturdy steel sheet chassis, rubber-mounted engine

6.2 Engine

Engine	
Product	Yanmar diesel engine
Type	3TNV70-VNS
Design	Water-cooled 4 stroke diesel engine
Number of cylinders	3
Displacement	854 cm³ (52.1 in^3)
Nominal bore and stroke	70 x 74 mm (2.8 x 2.9 in)
Power	9.9 kW at 2100 rpm (13.3 hp/2100 rpm)
Max. torque	51.5 Nm at 1500 rpm (38 ft.lbs/1500 rpm)
Max. engine speed without load	2270 +/− 25 rpm
Idling speed	1300 +/− 25 rpm (1300 +/− 25 rpm)
Fuel injection system	Indirect injection
Starting aid	Glow plug
Exhaust values according to:	
Up to 2012	EPA tier IV final
Starting from 2012	--[1]
Starting 2019[2]	EU stage V

1. No EU emissions guideline for diesel engines under 19 kW (25.5 hp)
2. Valid for diesel engines with production date starting 2019

6.3 Travel gear and swivel unit

Travel gear/swivel unit	
Driving Speed	1.82 km/h (1.1 mph)
Climbing ability	30°/58 %
Track width	180 mm (7 in)
No. of track rollers on either side	2
Ground clearance	132 mm (5 in)
Ground pressure	0.24 kg/cm² (3.4 lbs/in^2)
Upper carriage swivel speed	8 rpm

6.4 Stabilizer blade

Stabilizer blade	
Width with stabilizer blade folded in/out	700/860 mm (27.6/34 in)
Height	198 mm (7.8 in)
Max. lift over/under subgrade	197/174 mm (7.8/6.9 in)

6.5 Operating hydraulics

Work hydraulics	
Pump Tier IV final	Twin gear pump 2 x 4 cm^3 (2 x 0.24 in^3)
Hydraulic pump displacement Tier IV final	2 x 10.7 l/min at 2675 rpm (2 x 2.8 gpm at 2675 rpm)
Control block	9 sections
Max. operating pressure (operating and travel hydraulics)	170 $^{\pm 3}$ bar (2466 psi)
Main pressure restriction for boom/bucket/stick	170 $^{\pm 3}$ bar (2466 psi)
Main pressure restriction for stabilizer blade	170 $^{\pm 3}$ bar (2466 psi)
Main pressure restriction for swivel drive (hydraulic motor pressure restriction)	70 bar (1015 psi)
Filter	Return filter
Hydraulic reservoir capacity	13.8 l (3.65 gal)

6.6 Connection values of Dual Power option

Hydraulic system	
Operating pressure at excavator connections	Max. 170 bar (2466 psi)
Flow rate	Max. 20 l/min (5.3 gal/min)

6.7 Electrical system

Electrical system	
Dynamo	12 V 20 A
Starter	12 V 1.1 kW (1.5 hp)
Battery	12 V 30 Ah

Fuses behind the right-hand trim

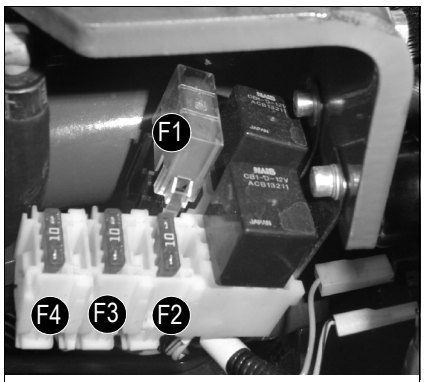

Fig. 202: Fuses

Fuse no.	Rated current (A)	Protected circuit
F1	40 A	Main fuse
F2	10 A	Fuse: relay, indicator, cutoff solenoid
F3	10 A	Travel signal (option)
F4	10 A	12 V power outlet

Relays behind the right-hand trim

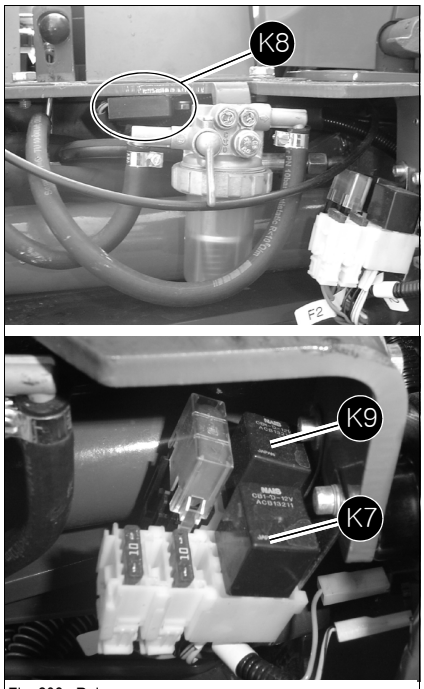

Fig. 203: Relays

Relay no.	Protected circuit
K 7	Starting relay
K 8	Cutoff solenoid time lag relay 1s
K 9	Cutoff solenoid switching relay

Fuses and relays with Dual Power option

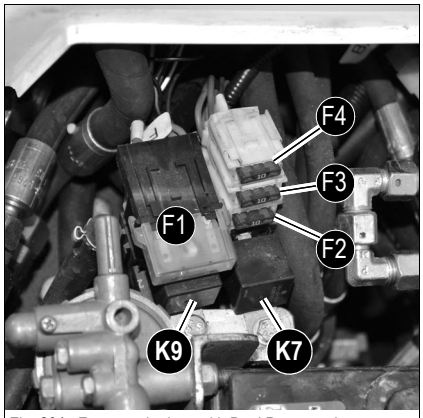

Fig. 204: Fuses and relays with Dual Power option

If the machine is equipped with the **Dual Power** option, the fuses and relays are located under the base plate.

Fuse no.	Rated current (A)	Protected circuit
F1	40 A	Main fuse
F2	10 A	Fuse: relay, indicator, cutoff solenoid
F3	10 A	Travel signal (option)
F4	10 A	12 V power outlet

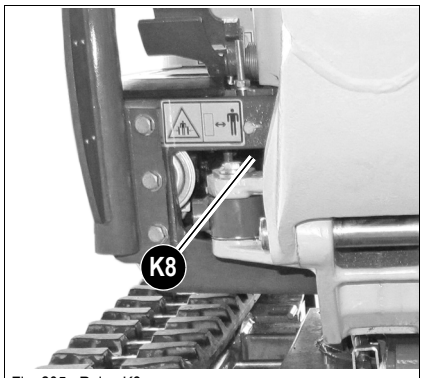

Fig. 205: Relay K8

Relay no.	**Protected circuit**
K7	Starting relay
K 8	Cutoff solenoid time lag relay 1s
K9	Cutoff solenoid switching relay
K116 **(A)**	Battery monitor

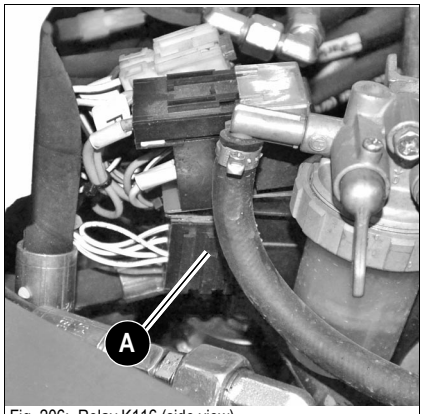

Fig. 206: Relay K116 (side view)

6.8 Noise measurement

Sound power level (Yanmar 3TNV70-VNS)	
Sound power level (L_{WA})[1]	93 dB (A)
Uncertainty factor[2]	1.2 dB(A)
Operator-perceived sound pressure level (L_{PA}) [3]	77 dB (A)

1. ISO 6395 (EC Directives 2000/14/EC and 2005/88/EC)
2. EN ISO 4871 (EC Directives 2000/14/EC and 2005/88/EC)
3. ISO 6394 (EC Directives 84/532/EEC, 89/514/EEC, 95/27/EEC)

Information!

Measurements performed on asphalted surface.

6.9 Vibration

Vibration	
Effective acceleration value for the upper extremities of the body (hand-arm vibration)	< Trigger value < 2.5 m/s^2
Effective acceleration value for the body (whole-body vibration)	< 0.5 m/s^2

Vibration values indicated in m/s².

Directive 2002/44/EC of European Parliament and Council on minimum health and safety requirements regarding exposure of workers to risks arising from physical agents (vibration).

Indications on hand-arm vibration

Hand-arm vibration is less than 2.5 m/s² during correct vehicle operation.

Indications on whole-body vibration

Whole-body vibration is less than 0.5 m/s² during correct vehicle operation.

Uncertainty of measurement K has been taken into account for the specified values.

The degree of vibration is influenced by various parameters.

Some of them are listed below:

- Operator: training, behavior, working method, and strain.
- Job site: organization, preparation, surroundings, weather conditions, and material.
- Machine: version, seat quality, quality of suspension system, attachments, and condition of attachments.

Precise indications on the vibration degrees cannot be made for the vehicle.

Determination of vibration level for the three vibration axes.

- Under typical operating conditions, use the average vibration values measured.
- In order to obtain the estimated vibration value for an experienced operator on level ground, subtract the factors from the average vibration value.
- In case of an aggressive working method or difficult terrain, add the environmental factors to the average vibration level in order to obtain the estimated vibration level.

Note:

For further vibration indications, refer to the indications in ISO/TR 25398 Mechanical Vibrations – Directive on Estimation of whole-body vibration during operation of earth moving vehicles. This publication uses measuring values of international institutes, organizations and manufacturers. It contains information on whole-body vibration for operators in earth moving vehicles. For more information on the vibration values of the machine, refer to Directive 2002/44/EC of European Parliament and Council on minimum health and safety requirements regarding exposure of workers to risks arising from physical agents (vibration).

It explains the values for vertical vibration under heavy operating conditions.

Directives on reduction of vibration values in earth moving vehicles:

- Perform correct adjustments and maintenance on the vehicle.
- Avoid jerky movements during machine operation.
- Keep slopes in a perfect condition.

Whole-body vibration can be reduced with the following guidelines:

- Use a vehicle and equipment of correct type and size.
- Follow the manufacturer's recommendations for maintenance.
  - Tire pressure.
  - Brake and steering systems.
  - Control elements, hydraulic system and linkage.
- Keep the job site in good condition:
  - Remove large rocks or obstacles.
  - Fill up ditches and holes.
  - Provide a vehicle and enough time to keep the job site in good condition.
- Use an operator seat according to the ISO 7096 requirements. Keep the operator seat in good condition and adjust it correctly:
  - Adjust the operator seat and suspension to the operator's weight and size.
  - Check and maintain the seat adjustment and suspension.
- Perform the following activities smoothly without any jerks.
  - Steering
  - Brakes
  - Acceleration
  - Shifting gears
- Move working devices without any jerks.
- Adapt your speed and the itinerary to minimize vibration:
  - Travel around obstacles and uneven ground.
  - Reduce your speed during vehicle travel across rough terrain.

- Reduce vibration to a minimum during long work cycles or during vehicle operation over long distances:
  - Use a machine with a suspension system (for example on the operator seat).
  - Enable the hydraulic oscillation damping if the vehicle is equipped with tracks.
  - If the vehicle is not equipped with hydraulic oscillation damping, reduce your speed to avoid bumps and jolts.
  - Load the vehicle on a truck or trailer to move between job sites.
- Other risk factors can affect drive comfort negatively. The following measures can improve drive comfort:
  - Adjust the operator seat and the control elements to a relaxed body posture.
  - Adjust the rearview mirrors to ensure optimal visibility so you can adopt an upright seating position.
  - Provide breaks to avoid sitting for long periods.
  - Do not jump off the control stand.
  - Picking up and raising loads repeatedly must be limited to a minimum.

Reference:

The vibration values and calculations are based on the indications made in ISO/TR 25398 Mechanical Vibrations – Guidelines for assessment of exposure to whole-body vibration during operation of earth moving vehicles.

The harmonized data comply with measurements made by international institutes, organizations and manufacturers. This publication offers information on the calculation of whole-body vibrations for operators of earth moving vehicles. This method is based on vibration measurements under real operating conditions for all vehicles. Read the original guidelines. This chapter summarizes part of the legal regulations. However, its aim is not to replace the original references. Other parts of this document are based on information of the United Kingdom Health and Safety Executive.

For more information on vibration, refer to Directive 2002/44/EC of European Parliament and Council on minimum health and safety requirements regarding exposure of workers to risks arising from physical agents (vibration).

Your HCE dealer provides information on other machine functions reducing vibration and on safe operation.

6.10 Coolant compound table

Outside temperature[1]	Distilled water	Coolant[2]
Up to °C (°F)	% by volume	% by volume
−37 (−34.6)	50	50

1. Use the 1:1 concentration for warm outside temperatures, too, to ensure protection against corrosion, cavitation, and deposits.
2. Do not mix the coolant with other coolants.

6.11 Weight

without rollbar	
Operating weight[1]	1032 kg (2275 lbs)
Transport weight[2]	935 kg (2061 lbs)
with rollbar	
Operating weight[1]	1087 kg (2396 lbs)
Transport weight[2]	990 kg (2182 lbs)

1. Service weight: basic machine + full fuel tank + backhoe bucket (250 mm/10 in) + user (75 kg/165 lbs).
2. Transport weight: basic machine + 10% fuel capacity.

Information!

The actual machine weight depends on the selected options and must be read off the type label.
Add the weight of all subsequently installed equipment to the weight of the machine.
Weight indications can vary by +/- 2%.

6.12 Dimensions model with rollbar

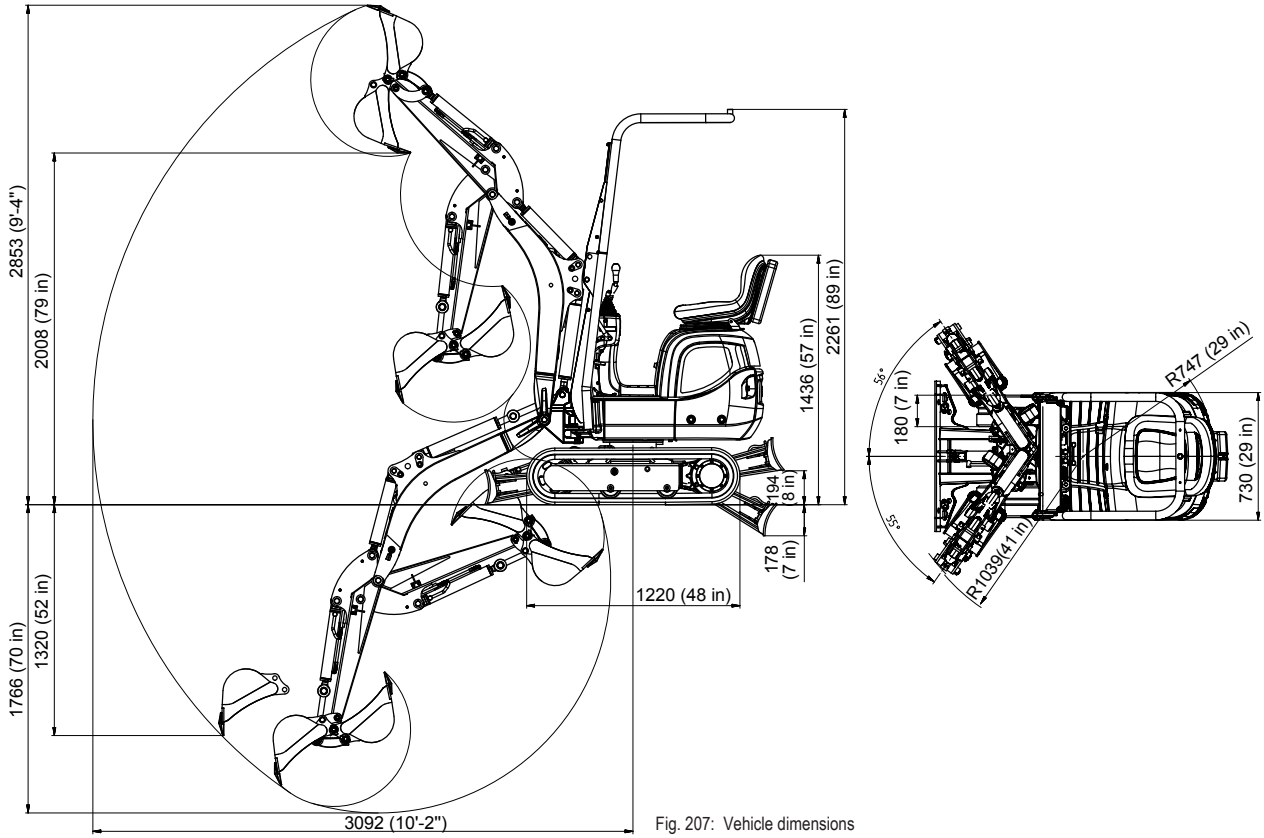

Fig. 207: Vehicle dimensions

Main data	
Height	2261 mm (89 in)
Upper carriage width	730 mm (29 in)
Width with retracted/extended telescopic travel gear	700/860 mm (28/34 in)
Width with stabilizer blade folded in/out	700/860 mm (28/34 in)
Transport length	2747 mm (9')
Max. digging depth	1766 mm (70 in)
Stick length	890 mm (35 in)
Max. vertical digging depth	1320 mm (52 in)
Max. digging height	2853 mm (9'-4")
Max. tilt-out height	2008 mm (79 in)
Max. digging radius	3092 mm (10'-2")
Max. reach at ground level	3046 mm (10')
Max. breakout force at bucket tooth	8.9 kN (2001 lbf)
Max. tearout force	4.5 kN (1012 lbf)
Min. tail end slewing radius	747 mm (29 in)
Max. tail end lateral projection of upper carriage, 90° rotation With retracted/extended telescopic travel gear With stabilizer blade folded in/out	 397 mm/317 mm (16/12 in) 397 mm/317 mm (16/12 in)
Max. boom displacement to bucket center (right side)	287 mm (11 in)
Max. boom displacement to bucket center (left side)	242 mm (10 in)

6.13 Dimensions without rollbar

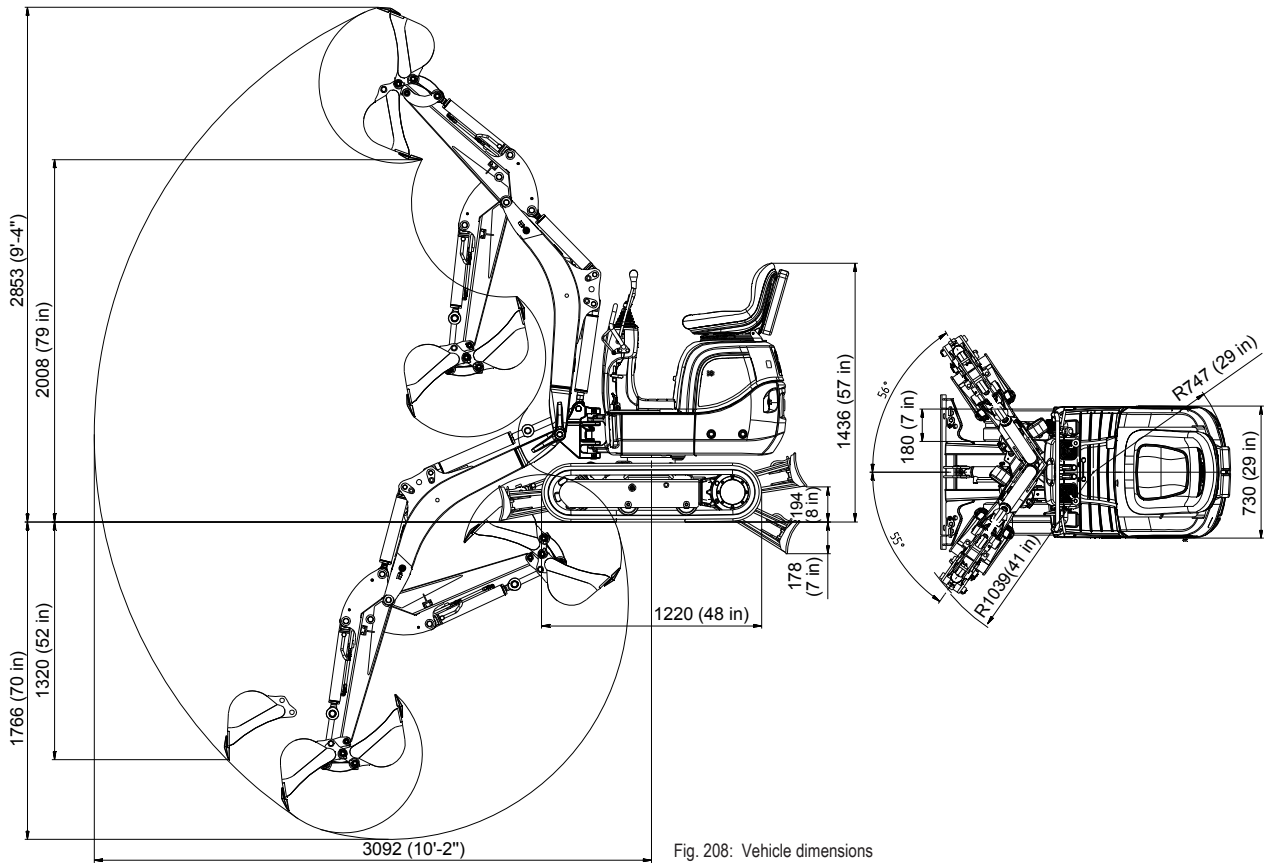

Fig. 208: Vehicle dimensions

Main data	
Height	1436 mm (57 in)
Upper carriage width	730 mm (29 in)
Width with retracted/extended telescopic travel gear	700/860 mm (28/34 in)
Width with stabilizer blade folded in/out	700/860 mm (28/34 in)
Transport length	2747 mm (9')
Max. digging depth	1766 mm (70 in)
Stick length	890 mm (35 in)
Max. vertical digging depth	1320 mm (52 in)
Max. digging height	2853 mm (9'-4")
Max. tilt-out height	2008 mm (79 in)
Max. digging radius	3092 mm (10'-2")
Max. reach at ground level	3046 mm (10')
Max. breakout force at bucket tooth	8.9 kN (2001 lbf)
Max. tearout force	4.5 kN (1012 lbf)
Min. tail end slewing radius	747 mm (29 in)
Max. tail end lateral projection of upper carriage, 90° rotation With retracted/extended telescopic travel gear With stabilizer blade folded in/out	 397 mm/317 mm (16/12 in) 397 mm/317 mm (16/12 in)
Max. boom displacement to bucket center (right side)	287 mm (11 in)
Max. boom displacement to bucket center (left side)	242 mm (10 in)

6.14 Lift capacity tables

Safety instructions - lift capacity table

DANGER

Crushing hazard due to tipping over of machine.

Causes serious crushing or injury resulting in death.

- The authorized lift capacity specified in the table must never be exceeded. The lowest value applies.
- Get informed on the lift capacity of the attachment before using it.
- If a bucket or attachment (hammer, etc.) is installed, the dead weight and the contents of the bucket must be subtracted from the lift capacity specified in the table. Load density must also be taken into account.
- All lifting gear applications are forbidden with this machine.
- Only perform work with an extended telescopic travel gear.

NOTICE

If the specified lift capacity is exceeded, danger of damage to property due to tipping over of machine.

- The authorized lift capacity specified in the table must never be exceeded. The lowest value applies.

Information!

The indications are only approximate values. Attachments, uneven ground and soft or bad ground conditions affect lift capacity. The operator must take these influences into account.

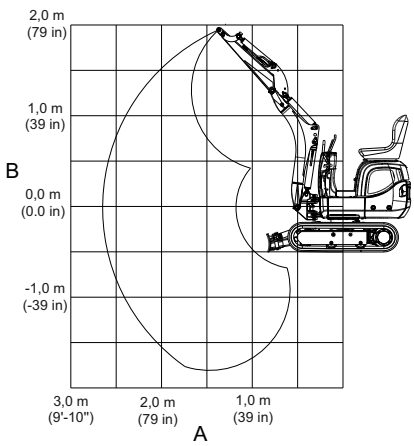

Fig. 209: Lift capacity table

A	Reach from live ring center
B	Height

All table indications in kg (lbs) and horizontal position on firm and level ground, and without bucket or attachment.

Calculation basis: according to ISO 10567.

Setting pressure on boom cylinder: 17000 kPa (2466 psi)

The machine's lift capacity is restricted by the hydraulic output and the hydraulic system's stabilizing features.

Neither 75% of the static tilt load nor 87% of the hydraulic lift capacity is exceeded.

The lift capacity applies under the following conditions:

- Lubricants and engine/vehicle fluids at the mandatory levels
- Full fuel tank
- Machine at operating temperature
- Operator weight: 75 kg (165 lbs)
- Telescopic travel gear extended

Longitudinal direction, stabilizer blade at front and raised

A / B	max A max (m/ft)	max kg/lbs	2.5 m (98 in)	2.0 m (79 in)	1 .5 m (59 in)	1.0 m (39 in)
2.4 m (94 in)	1.41 (4.61)	216 (477)	--	--	--	--
2.0 m (79 in)	2.03 (6.64)	205 (453)	--	203 (448)	--	--
1.5 m (59 in)	2.40 (7.86)	163 (358)	--	189 (416)	--	--
1.0 m (39 in)	2.59 (8.49)	142 (314)	151 (332)	212 (469)	247 (544)	--
0.5 m (20 in)	2.65 (8.7)	135 (298)	147 (325)	204 (450)	311 (685)	--
0.0 m (0.0 in)	2.60 (8.52)	137 (303)	145 (319)	197 (434)	296 (653)	570 (1257)
−0.5 m (−20 in)	2.41 (7.91)	146 (323)	--	194 (428)	292 (644)	561 (1236)
−1.0 m (−39 in)	2.05 (6.73)	138 (304)	--	149 (328)	243 (536)	418 (922)

Longitudinal direction, stabilizer blade at front and lowered

A / B	max A max (m/ft)	max kg/lbs	**2.5 m (98 in)**	**2.0 m (79 in)**	**1.5 m (59 in)**	**1.0 m (39 in)**
2.4 m (94 in)	1.41 (4.61)	216 (477)	--	--	--	--
2.0 m (79 in)	2.03 (6.64)	205 (453)	--	203 (448)	--	--
1.5 m (59 in)	2.40 (7.86)	191 (420)	--	189 (416)	--	--
1.0 m (39 in)	2.59 (8.49)	177 (391)	185 (407)	217 (478)	247 (544)	--
0.5 m (20 in)	2.65 (8.70)	166 (365)	184 (407)	247 (544)	366 (807)	--
0.0 m (0.0 in)	2.60 (8.52)	155 (343)	171 (377)	247 (544)	379 (835)	678 (1495)
−0.5 m (−20 in)	2.41 (7.91)	146 (323)	--	215 (475)	325 (718)	561 (1236)
−1.0 m (−39 in)	2.05 (6.73)	138 (304)	--	149 (328)	243 (536)	418 (922)

Longitudinal direction, stabilizer blade at rear

A / B	max A max (m/ft)	max kg/lbs	**2.5 m (98 in)**	**2.0 m (79 in)**	**1.5 m (59 in)**	**1.0 m (39 in)**
2.4 m (94 in)	1.41 (4.61)	216 (477)	--	--	--	--
2.0 m (79 in)	2.03 (6.64)	205 (453)	--	203 (448)	--	--
1.5 m (59 in)	2.40 (7.86)	175 (386)	--	189 (416)	--	--
1.0 m (39 in)	2.59 (8.49)	154 (339)	162 (358)	217 (478)	247 (544)	--
0.5 m (20 in)	2.65 (8.70)	146 (322)	159 (351)	220 (484)	335 (738)	--
0.0 m (0.0 in)	2.60 (8.52)	148 (327)	156 (344)	213 (469)	320 (705)	618 (1363)
−0.5 m (−20 in)	2.41 (7.91)	146 (323)	--	210 (462)	316 (696)	561 (1236)
−1.0 m (−39 in)	2.05 (6.73)	138 (304)	--	149 (328)	243 (536)	418 (922)

Crosswise

A / B	max		2.5 m (98 in)	2.0 m (79 in)	1.5 m (59 in)	1.0 m (39 in)
	A max (m/ft)	kg/lbs				
2.4 m (94 in)	1.41 (4.61)	216 (477)	--	--	--	--
2.0 m (79 in)	2.03 (6.64)	167 (367)	--	170(376)	--	--
1.5 m (59 in)	2.40 (7.86)	126 (277)	--	172 (378)	--	--
1.0 m (39 in)	2.59 (8.49)	109 (240)	116 (255)	166 (366)	247 (544)	--
0.5 m (20 in)	2.65 (8.70)	103 (227)	113 (248)	158 (347)	241 (531)	--
0.0 m (0.0 in)	2.60 (8.52)	104 (230)	110 (242)	150 (332)	226 (499)	431 (951)
−0.5 m (−20 in)	2.41 (7.91)	115 (253)	--	148 (325)	222 (490)	433 (955)
−1.0 m (−39 in)	2.05 (6.73)	138 (304)	--	149 (328)	225 (497)	418 (922)

HCE keep abreast of the latest technical developments and constantly improve their products. For this reason, we may from time to time need to make changes to figures and descriptions in this documentation that do not reflect products that have already been delivered and that will not be implemented on these vehicles.

Technical data, dimensions and weights are only given as an indication. Responsibility for errors or omissions not accepted.

No reproduction or translation of this publication, in whole or part, without the written consent of HCE.

All rights under the provision of the Copyright Act are reserved.